Kvaser T-cannector v2 User's Guide



Copyright 2017-2026 Kvaser AB, Mölndal, Sweden
https://www.kvaser.com

Printed Wednesday 7th October, 2026

We believe that the information contained herein was accurate in all respects at the time of printing. Kvaser AB cannot, however, assume any responsibility for errors or omissions in this text. Also note that the information in this document is subject to change without notice and should not be construed as a commitment by Kvaser AB.

(This page is intentionally left blank.)

Contents

1 About this manual **4**

2 Introduction **5**
2.1 Welcome to Kvaser T-cannector v2 5
2.2 Major features 6

3 Kvaser T-cannector v2 hardware **7**
3.1 Power Distribution 8
3.2 LED Indicators 8
3.3 Termination Adjustment 9

4 Appendices **10**
4.1 Technical data 10

5 Disposal and Recycling Information **11**

6 Legal acknowledgements **12**
6.1 Usage warning 12
6.2 EU Regulatory Compliance 13

7 Document Revision History **14**

1 About this manual

This manual is intended for Kvaser T-cannector v2 users. This document contains a description of the hardware's properties and functionality.

2 Introduction

This section will describe the functions and features of the Kvaser T-cannector v2.

2.1 Welcome to Kvaser T-cannector v2



Figure 1: Kvaser T-cannector v2

Kvaser T-cannector v2 is a CAN bus hub with three D-SUB9 socket connectors and one D-SUB9 plug connector. Offering an adjustable CAN termination load (connecting an optional termination resistor of 120 Ω or 60 Ω) the Kvaser T-cannector v2 provides an affordable and safe way of terminating the CAN bus when using Kvaser interfaces on a development board, as well as powering bus powered devices, such as Kvaser's Blackbird, Hybrid, and Memorator series.

Device	Product Number (EAN)
Kvaser T-cannector v2	73-30130-00776-5

Table 1: Kvaser T-cannector v2 devices and their product numbers.

2.2 Major features

- Acts as a CAN bus hub with three D-SUB9 socket, and one D-SUB9 plug, connectors
- Each D-SUB9 has screws to secure the connection to the Kvaser CAN interface
- Adjustable termination via easy-to-use three-way switch
- LED to indicate power on
- Voltage range of 12 - 24 V DC
- A complementary 12 V DC, 1 A power supply is included

3 Kvaser T-cannector v2 hardware

Kvaser T-cannector v2 is a CAN bus hub with three D-SUB9 sockets (see Figure 2) and one D-SUB9 plug connector (see Figure 3).

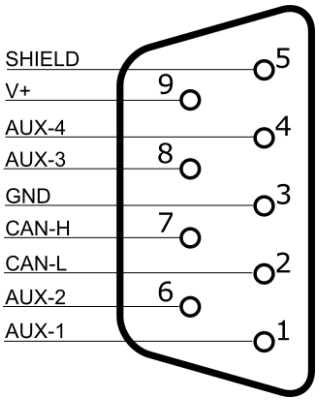

Figure 2: Pinout of D-SUB9 socket.

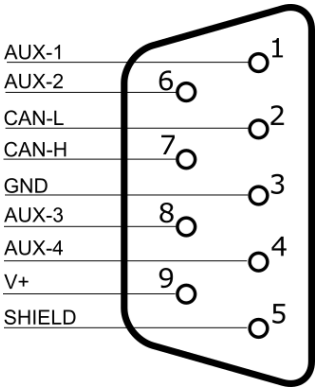

Figure 3: Pinout of D-SUB9 plug.

All pins of these connectors are fully connected, e.g. pin 1 on each connector is connected to pin 1 on all other connectors, see Figure 4 on Page 8.

Pin 9 (V+) and pin 3 (GND) are connected to the power supply. A power indicator LED is connected as shown in Figure 4 on Page 8. The termination resistor is selectable using the three-way switch marked SW.

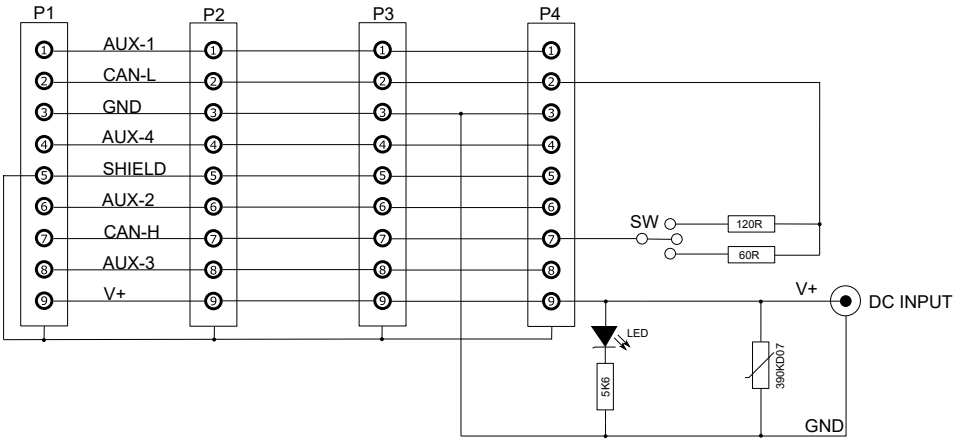

Figure 4: Schematic over the Kvaser T-cannector v2.

3.1 Power Distribution

The Kvaser T-cannector v2 may be powered from an external DC power supply, via a 2.1 x 5.5 mm connector, providing a power source for Kvaser CAN interfaces. The Kvaser T-cannector v2 may also distribute power via V+ in any of the D-SUB9 connectors.

3.2 LED Indicators

The Kvaser T-cannector v2 has one red power LED indicator, see Figure 5.



Figure 5: Power LED and termination three-way switch on Kvaser T-cannector v2.

3.3 Termination Adjustment

The Kvaser T-cannector v2 has an adjustable CAN termination that provides an effective way of terminating the CAN circuit. The optional termination of 120 Ω or 60 Ω is selected through a three-way switch, see Figure 5.

4 Appendices

In this section you will find technical information about the Kvaser T-cannector v2 and its connectors.

4.1 Technical data

In Table 2 below you will find the technical specifications of Kvaser T-cannector v2.

CAN Connectors	3 sockets, 1 plug (D-SUB9)
Galvanic isolation	No
CAN Bit Rate	1 Mbit/s "Classic CAN"
CAN FD Bit Rate	Up to 8 Mbit/s
Power consumption	Typically 20 mW at 12 V DC
Voltage range	12 - 24 V DC, max 2 A
Dimensions	55 x 90 x 30 mm
Weight	100 g
Operating temperature	−30 °C to +80 °C
Storage temperature	−40 °C to +85 °C
Relative humidity	0 % to 85 % (non-condensing.)

Table 2: Technical Specifications for Kvaser T-cannector v2

5 Disposal and Recycling Information



When this product reaches its end of life, please dispose of it according to your local environmental laws and guidelines.

For information about Kvaser's recycling programs, visit:
https://www.kvaser.com/en/kvaser/recycling-policy.html

6 Legal acknowledgements

6.1 Usage warning



WARNING FOR ALL USERS

WARNING! - YOUR USE OF THIS DEVICE MUST BE DONE WITH CAUTION AND A FULL UNDERSTANDING OF THE RISKS!
THIS WARNING IS PRESENTED TO INFORM YOU THAT THE OPERATION OF THIS DEVICE MAY BE DANGEROUS. YOUR ACTIONS CAN INFLUENCE THE BEHAVIOR OF A CAN-BASED DISTRIBUTED EMBEDDED SYSTEM, AND DEPENDING ON THE APPLICATION, THE CONSEQUENCES OF YOUR IMPROPER ACTIONS COULD CAUSE SERIOUS OPERATIONAL MALFUNCTION, LOSS OF INFORMATION, DAMAGE TO EQUIPMENT, AND PHYSICAL INJURY TO YOURSELF AND OTHERS. A POTENTIALLY HAZARDOUS OPERATING CONDITION IS PRESENT WHEN THE FOLLOWING TWO CONDITIONS ARE CONCURRENTLY TRUE: THE PRODUCT IS PHYSICALLY INTERCONNECTED TO A REAL DISTRIBUTED EMBEDDED SYSTEM; AND THE FUNCTIONS AND OPERATIONS OF THE REAL DISTRIBUTED EMBEDDED SYSTEM ARE CONTROLLABLE OR INFLUENCED BY THE USE OF THE CAN NETWORK. A POTENTIALLY HAZARDOUS OPERATING CONDITION MAY RESULT FROM THE ACTIVITY OR NON-ACTIVITY OF SOME DISTRIBUTED EMBEDDED SYSTEM FUNCTIONS AND OPERATIONS, WHICH MAY RESULT IN SERIOUS PHYSICAL HARM OR DEATH OR CAUSE DAMAGE TO EQUIPMENT, DEVICES, OR THE SURROUNDING ENVIRONMENT.
WITH THIS DEVICE, YOU MAY POTENTIALLY:

- CAUSE A CHANGE IN THE OPERATION OF THE SYSTEM, MODULE, DEVICE, CIRCUIT, OR OUTPUT.
- TURN ON OR ACTIVATE A MODULE, DEVICE, CIRCUIT, OUTPUT, OR FUNCTION.
- TURN OFF OR DEACTIVATE A MODULE, DEVICE, CIRCUIT, OUTPUT, OR FUNCTION.
- INHIBIT, TURN OFF, OR DEACTIVATE NORMAL OPERATION.
- MODIFY THE BEHAVIOR OF A DISTRIBUTED PRODUCT.
- ACTIVATE AN UNINTENDED OPERATION.
- PLACE THE SYSTEM, MODULE, DEVICE, CIRCUIT, OR OUTPUT INTO AN UNINTENDED MODE.

ONLY THOSE PERSONS WHO:
(A) ARE PROPERLY TRAINED AND QUALIFIED WITH RESPECT TO THE USE OF THE DEVICE,
(B) UNDERSTAND THE WARNINGS ABOVE, AND
(C) UNDERSTAND HOW THIS DEVICE INTERACTS WITH AND IMPACTS THE FUNCTION AND SAFETY OF OTHER PRODUCTS IN A DISTRIBUTED SYSTEM AND THE APPLICATION FOR WHICH THIS DEVICE WILL BE APPLIED, MAY USE THE DEVICE.
PLEASE NOTE THAT YOU CAN INTEGRATE THIS PRODUCT AS A SUBSYSTEM INTO HIGHER-LEVEL SYSTEMS. IN CASE YOU DO SO, KVASER AB HEREBY DECLARES THAT KVASER AB'S WARRANTY SHALL BE LIMITED TO THE CORRECTION OF DEFECTS, AND KVASER AB HEREBY EXPRESSLY DISCLAIMS ANY LIABILITY OVER AND ABOVE THE REFUNDING OF THE PRICE PAID FOR THIS DEVICE, SINCE KVASER AB DOES NOT HAVE ANY INFLUENCE ON THE IMPLEMENTATIONS OF THE HIGHER-LEVEL SYSTEM, WHICH MAY BE DEFECTIVE.

6.2 EU Regulatory Compliance

KVASER **EU Declaration of Conformity (DoC)**

We

Company Name:	Kvaser AB	City:	Mölndal
Postal address:	Aminogatan 25	Telephone number:	+46 31 886344
Postcode:	431 53	E-mail address:	sales@kvaser.com

declare that the DoC is issued under our sole responsibility and belongs to the following product:

Product: Kvaser T-cannector v2

Object of the declaration (identification of apparatus allowing traceability):
Product: Kvaser T-cannector v2
Type: 73-30130-00776-5

The object of the declaration described above is in conformity with the relevant Union harmonisation legislation:
RoHS recast Directive 2011/65/EU (Art. 4.1)

The following harmonised standards and technical specifications have been applied
(title, date of standard/specification):

EN 50581 (2012)

Signed for and on behalf of:

Mölndal	2019-12-05	
Place of issue	Date of issue	Claes Haglund, Supply Chain and Quality Director

7 Document Revision History

Version history for document UG_98209_t-cannector_v2:

Revision	Date	Changes
1.0	2018-01-30	Initial version.
2.0	2018-10-15	Updated EU Regulatory Compliance.
2.1	2019-08-09	Url protocol updated.
2.2	2020-01-27	Added sdoc.
2.3	2021-04-08	Correction, pin 3 is not connected to pin 6, pin 3 is connected to power supply.
2.4	2021-09-02	Replaced drawings, D-SUB9 socket and plug naming, added hardware photo, removed FCC.
2.5	2022-03-15	Minor textual changes.
2.6	2024-03-15	Updated Kvaser logo.
2.7	2025-01-13	Minor textual changes.