Kvaser Air Bridge Light HS User's Guide



Copyright 2026 Kvaser AB, Mölndal, Sweden
https://www.kvaser.com

Printed Sunday 31st May, 2026

We believe that the information contained herein was accurate in all respects at the time of printing. Kvaser AB cannot, however, assume any responsibility for errors or omissions in this text. Also note that the information in this document is subject to change without notice and should not be construed as a commitment by Kvaser AB.

(This page is intentionally left blank.)

Contents

1 About this manual **4**

2 Introduction **5**
2.1 Welcome to Kvaser Air Bridge Light HS 5
2.2 Major Features 7

3 Kvaser Air Bridge Light HS hardware **8**
3.1 Hardware installation 8
3.2 CAN channel 8
3.3 Power supply 9
3.4 LED Indicators 9
3.5 Autobaud 10
3.6 Optional bit rate setting 11

4 Appendices **12**
4.1 Technical data 12
4.2 Physical dimensions 13
4.3 CAN Connectors 13
4.4 CAN bus termination 15
4.5 Kvaser Air Bridge Utility CLI 15
4.5.1 Initial setup 15
4.5.2 Command summary 18

5 Safety Instructions **20**
5.1 Intended Use 20
5.2 Usage Warning 20

6 Disposal and Recycling Information **22**

7 Legal acknowledgements **24**
7.1 EU Regulatory Compliance 24
7.2 FCC Regulatory Compliance 26
7.3 Patents, Copyrights and Trademarks 30

8 Document Revision History **31**

1 About this manual

This manual is intended for Kvaser Air Bridge Light HS users. This document contains a description of the hardware's properties and general instructions on how to use the Kvaser Air Bridge Light HS.

Two complementary documents are available:

- Kvaser Air Bridge Installation Guide
- Kvaser Air Bridge System Integration Guide

The Kvaser Air Bridge Installation Guide provides installation advice for end-users who use Kvaser Air Bridge Light HS and want to optimize radio performance and reach. The Kvaser Air Bridge Installation Guide applies to all Kvaser Air Bridge variants.

The Kvaser Air Bridge System Integration Guide provides design-in advice for system integrators who use Kvaser Air Bridge Light HS as a system component and want to make the most of its data bridging capability, not least in scenarios where multiple Kvaser Air Bridge Light HSs are to be employed. The Kvaser Air Bridge System Integration Guide applies to all Kvaser Air Bridge variants.

2 Introduction

This section describes the functions and features of the Kvaser Air Bridge Light HS.

The Kvaser Air Bridge Light HS comes in a pair of pre-configured and statically paired devices as compared to the Kvaser Air Bridge M12 (not to be confused with Kvaser Air Bridge Light HS) which is designed as a single, multi-role device that can take part in a 'one to any' configuration. The static pairing is in some cases an advantage from a user perspective because a customer only to has to plug it in for it to work directly.

To aid readability, the name Kvaser Air Bridge is hereinafter used to refer to the Kvaser Air Bridge product in general. The name Kvaser Air Bridge Light HS is used to refer to one of the four Kvaser Air Bridge Light HS variants.

Two of the Kvaser Air Bridge Light HS variants are approved for the European Union while two Kvaser Air Bridge Light HS (FCC) variants are optimized for the US. The variants share the same functionality but have different radio transmitting schemes due to regulatory differences.

Note: all Kvaser Air Bridge devices marked with an FCC ID are approved for use in the US.

2.1 Welcome to Kvaser Air Bridge Light HS



Figure 1: Kvaser Air Bridge Light HS

Kvaser Air Bridge Light HS is a small, yet advanced, wireless CAN bridge that can be used as a CAN system gateway between two CAN networks. This radio solution can be used to connect CAN based control systems and test equipment in scenarios and situations where it is desirable to replace cabling and related parts, to connect a moving or rotating system components, to interface to systems in inaccessible areas or to ensure electrical isolation during maintenance of high voltage power lines.

The Kvaser Air Bridge Light HS consists of a preconfigured pair of plug and play devices.

This guide applies to the Kvaser Air Bridge Light HS devices using at least firmware versions listed in Table 1 on Page 6.

Device	Product Number	Firmware
Kvaser Air Bridge Light HS	73-30130-00808-3	2.4.0
Kvaser Air Bridge Light HS M12	73-30130-01141-0	2.4.0
Kvaser Air Bridge Light HS (FCC)	73-30130-01008-6	2.4.0
Kvaser Air Bridge Light HS M12 (FCC)	73-30130-01148-9	2.4.0

Table 1: Kvaser Air Bridge Light HS devices and their EAN numbers.

The (00808-3 and 01141-0) Kvaser Air Bridge Light HS is approved for the European Union.

The (01008-6 and 01148-9) Kvaser Air Bridge Light HS (FCC) is optimized for the US.

2.2 Major Features

- Forms a wireless CAN bridge between two Kvaser Air Bridge Light HS devices.
- Supports both CAN 2.0A and CAN 2.0B active, 11-bit and 29-bit identifiers.
- High-Speed CAN connection (compliant with ISO 11898-2), up to 1 Mbit/s.
- Compatible with J1939, CANopen, NMEA 2000® and DeviceNet. Higher layer protocol translation is handled by the user's application. For software support please see our Technical Associates products and our Software Download page (www.kvaser.com).
- Driver-free with optional configuration of bit rate.
- Point-to-point radio link.
- Proprietary wireless protocol provides robust, low latency connection in an instant.
- Internal antenna design with polarization diversity.
- Power supplied through the CAN bus interface.
- Automatic bit rate detection or user configured bit rate.
- Bit rate conversion between CAN bus segments with different bit rates.
- User configurable bit rates (125k, 250k, 500k and 1M).
- IP65-rated, dust and water-resistant, aluminium housing.
- IP67-rated M12 connector for cabling with extra dust and water-tightness, suitable for outdoor installation.
- Extended operating temperature range.

3 Kvaser Air Bridge Light HS hardware

In this section you can read more about the CAN channel, power supply and LED indicators.

3.1 Hardware installation

The Kvaser Air Bridge Light HS is a wireless CAN bridge comprising a preconfigured pair of plug- and-play devices. This radio solution can be used to connect CAN based control systems and test equipment in scenarios and situations where it is desirable to replace cabling and related parts. The Kvaser Air Bridge Light HS requires no driver or cumbersome configuration. Just connect the devices to their CAN segments, nothing else is required!

When connected to a CAN bus system, a Kvaser Air Bridge Light HS device will by default determine the bit rate used by the attached CAN system using Automatic Bit Rate Detection (autobaud), see Section 3.5, Autobaud, on Page 10. Once the autobaud detection has completed successfully, the devices will transmit CAN messages back and forth until the devices are powered down.

Note: The autobaud feature can be overridden to speed up connection time, by selecting one of four supported bit rates. As the Kvaser Air Bridge protocol provides an internal bit rate conversion scheme, the bit rates may be chosen independently for every Kvaser Air Bridge device. Selection of bit rate is done with the Kvaser Air Bridge Utility CLI.

The Kvaser Air Bridge Light HS devices will only forward CAN messages between the two attached CAN bus segments. Error frames and arbitration information will not be forwarded since this information is only applicable for the local physical network.

The recommended minimum separation between the two devices in a Kvaser Air Bridge Light HS pair is 0.5 m.

For scenarios involving multiple pairs of Kvaser Air Bridge devices or scenarios where Kvaser Air Bridge devices are located near other radio devices operating in the 2.4 GHz ISM band, please refer to the Kvaser Air Bridge Installation Guide.

3.2 CAN channel

The Kvaser Air Bridge Light HS has one CAN Hi-Speed channel with a 9-pin D-SUB CAN connector.

The Kvaser Air Bridge Light HS M12 has one CAN Hi-Speed channel with a 5-pin M12 Male connector.

See Section 4.3, CAN Connectors, on Page 13 for details about the pinout.



Figure 2: 9-pin Male D-SUB CAN connector



Figure 3: M12 5-pole Male CAN connector

3.3 Power supply

The Kvaser Air Bridge Light HS is powered through the CAN connector. To operate the Kvaser Air Bridge Light HS, you **must** supply 9-36 VDC power through the CAN connector.

3.4 LED Indicators

The functions of the LED indicators on the Kvaser Air Bridge Light HS are shown in Table 2.

LED	Description
CAN (Yellow)	CAN channel status, indicate received and sent messages.
RF (Blue)	Radio Link status, indicate received radio packets.
POWER (Green)	Indicates that the device has been powered on and bit rates are established.

Table 2: LEDs on the Kvaser Air Bridge Light HS.



Before power is indicated, the LEDs briefly perform an LED test, indicate states related to the establishment of the radio link and indicate state of the autobaud detection.



Figure 4: LEDs on the Kvaser Air Bridge Light HS.

3.5 Autobaud

The Kvaser Air Bridge devices provides an autobaud feature which is the default setting that will automatically detect and connect to any of the following CAN bus bit rates:

- 1 Mbit/s
- 500 kbit/s
- 250 kbit/s
- 125 kbit/s

The Autobaud Detection is done locally, so a Kvaser Air Bridge can be used to bridge two different CAN bus segments operating at different bit rates. However, the amount of traffic on the networks will determine whether the system designer should allow the networks to be bridged via the Kvaser Air Bridge.



Autobaud is the process of automatically selecting the correct bus parameters for communication on the connected CAN bus based on received CAN traffic. The Autobaud Detection is driven by the reception of CAN messages on the CAN bus segment. This means that there needs to be existing CAN traffic on the network for the Autobaud Detection to work.

If, after 15 seconds of power on, the autobaud detection process has only worked successfully on one of the paired devices the other device will be configured to the same CAN network bit rate. The Autobaud Detection will continue even after 15 seconds, if none of the supported CAN system bit rates have been detected on either of the connected CAN bus segments.



If Kvaser Air Bridge devices are used to bridge two different CAN networks operating at different bit rates, both CAN bus segments need to send messages during the initial 15 seconds after power on in order for the Autobaud Detection to correctly detect the different bit rates.

For any additional/specific bit rate requirement, please contact Kvaser for more information.

3.6 Optional bit rate setting

The bit rate can optionally be set to any of the following bit rate pre-sets:

- 1 Mbit/s
- 500 kbit/s
- 250 kbit/s
- 125 kbit/s
- Autobaud

By default, all Kvaser Air Bridge devices are configured for automatic bit rate detection, autobaud, for which one of the four bit rates above are automatically selected.

Note that the bit rate setting relates to the CAN bus only, and that each Kvaser Air Bridge device therefore can be configured differently.

4 Appendices

In this section you will find technical information about the Kvaser Air Bridge Light HS.

4.1 Technical data

In Table 3 below you will find the Kvaser Air Bridge Light HS's technical specifications. The physical dimensions are given in Figure 5 on Page 13 and Figure 6 on Page 13.

CAN Channels	1
CAN Transceivers	TJA1051T (Compliant with ISO 11898-2)
CAN Controller	Built into the processor
CAN Bit Rate	1 Mbit/s, 500 kbit/s, 250 kbit/s, and 125 kbit/s
Autobaud [1]	Yes
Message Rate, CAN 2.0A (11-bit ID) [2]	2×2100 msg/s
Message Rate, CAN 2.0B (29-bit ID) [2]	2×1680 msg/s
Message transfer capacity [3]	Corresponding to 100% bus load for both directions at 250 kbit/s bit rate
Message Transfer Latency	Typically 2.5-7.5 ms
Connection time from power up	Normally less than 1s
Reconnection time	Normally less than 200 ms
Wireless Communication	Frequency Hopping Spread Spectrum (FHSS) with Gaussian Frequency-Shift Keying (GFSK) modulation
Frequency Range	2400 MHz to 2483.5 MHz (2.4 GHz band)
Antenna Output Power	Max 18 dBm
Power Supply	9-36 VDC
Power Consumption	Typically 2 W
Current Consumption (at 9 VDC)	Typically 220 mA
Weight	85 g
IP Rating Housing	IP65
IP Rating CAN connector	IP67 Mated
Operating Temperature	–40 °C to +70 °C

Table 3: Technical Specifications.

[1] Automatic establishment upon start-up. Refer to Section 3.5, Autobaud, on Page 10 for more information.

[2] Typical message rate for both directions (recommended rate 1200). Refer to "Kvaser Air Bridge System Integration Guide" for more information.

[3] Recommended maximum load is 80%. Refer to "Kvaser Air Bridge System Integration Guide" for more information.

4.2 Physical dimensions

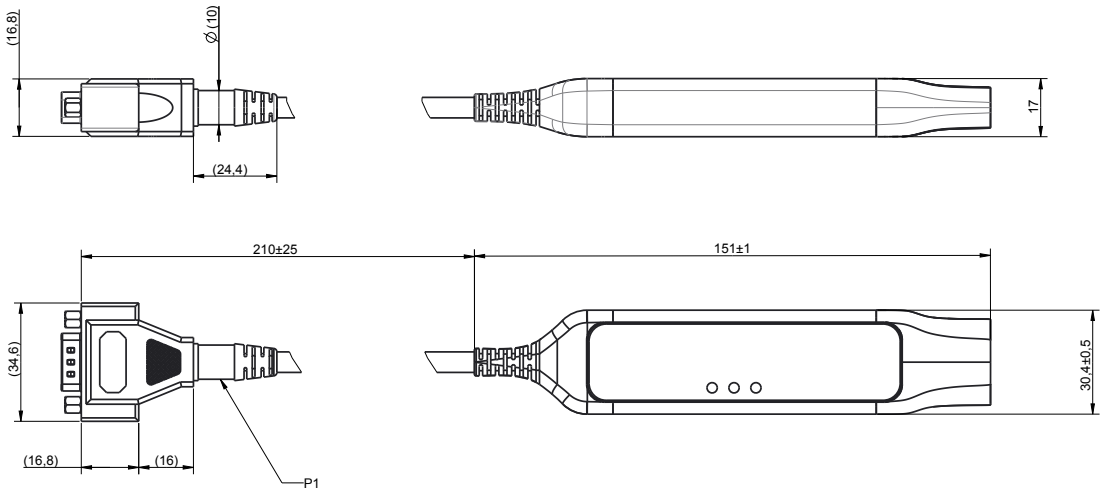

Figure 5: Physical dimensions of the Kvaser Air Bridge Light HS

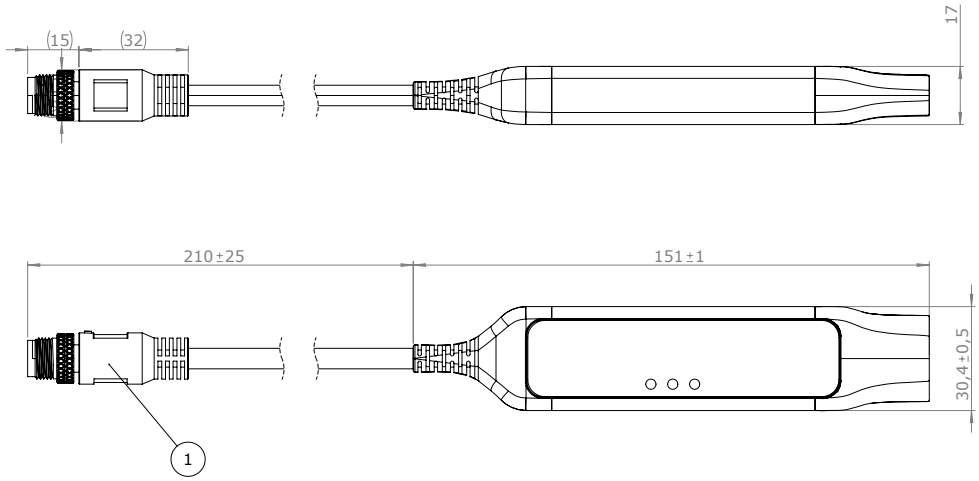

Figure 6: Physical dimensions of the Kvaser Air Bridge Light HS M12

4.3 CAN Connectors

Kvaser Air Bridge Light HS devices that use the 9-pin D-SUB connector (see Figure 7 on Page 14) have the pinning described in Table 4 on Page 14.

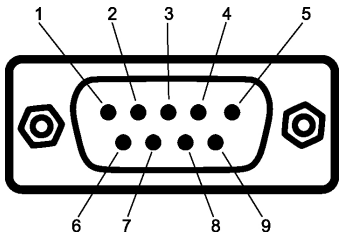

Figure 7: The D-SUB 9 connector pin numbers

D-SUB pin number	Function
1	Not connected
2	CAN_L
3	GND
4	Reserved
5	Shield
6	Not connected
7	CAN_H
8	Not connected
9	Power supply to the device

Table 4: Configuration of the 9-pin D-SUB

Kvaser Air Bridge Light HS devices that use the 5-pole male M12 connector have the pinning described in Table 5.

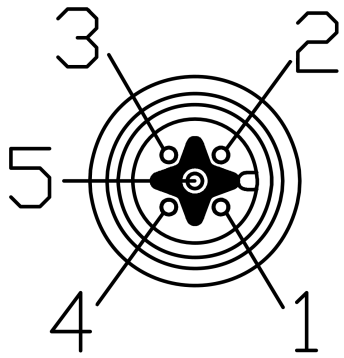

Figure 8: 5-pole male M12 Connector

M12 pin number	Function
1	Shield
2	Power supply to the device
3	GND
4	CAN_H
5	CAN_L

Table 5: 5-pole M12 pin configuration

4.4 CAN bus termination

Every CAN bus must be terminated with a 120 Ohm resistor at each end of the bus. The Kvaser Air Bridge Light HS does not contain any CAN bus termination, because their inclusion could cause severe disturbance in a system which is already correctly terminated.

For laboratory or testing use, the exact value of the termination resistors is not always critical. Sometimes a single terminator is sufficient. For production, proper termination is essential. If you see error frames on the bus, you should check the termination.



To save yourself a lot of trouble, always terminate the CAN bus properly.

4.5 Kvaser Air Bridge Utility CLI

4.5.1 Initial setup

General

The Kvaser Air Bridge Utility CLI is a PC based tool to be employed by Kvaser Air Bridge users for firmware upgrade, commissioning and configuration of Kvaser Air Bridge devices. The Kvaser Air Bridge Utility CLI contains all functionality for this purpose and the firmware distribution is embedded into the Kvaser Air Bridge Utility CLI.

The Utility CLI is a Command Line Interface that enabled control and configuration of parameters based on arguments followed by values. The arguments with values can be written in any order. Arguments are available in shortform (one hyphen in some cases followed by a letter) or in full (two hyphens in some cases followed by a complete word). The connect command to CAN bus 0 can e.g. be written as:

- -c -ch 0
- --connect --channel 0

Note: The verbosity of the Utility CLI can be increased by attaching the argument "-v" with the desired verbosity level. For more information, see the help information in the utility.

Note also that even though the configuration is described in steps below, the Utility CLI allows multiple arguments to be written on one command line. Configuration of a primary device with 250 kbit/s bit rate directly followed by a "list parameter" command is e.g. written as:

$File_location >$ `airbridge-utility-cli.exe -ch 0 -c -D -SAB 250 -LP`

In this case, all the device's parameters are listed directly after the command is sent while the power supply to the Kvaser Air Bridge device must be cycled before the configurations take effect. In the example above, the "list parameters" command (-LP) will initiate an immediate print of all configured parameters even without power having been cycled. After the power is cycled, the device will have the configured parameters that were printed, in this case including Primary role and 250 kbit/s bit rate.

The Kvaser Air Bridge Utility CLI is available on the Kvaser web site in the Download section and can be installed on a regular Windows PC.

A standard Kvaser interface is required to employ the Kvaser Air Bridge Utility CLI. The Kvaser Air Bridge Utility CLI is supported by the following interfaces:

Interface	Product Number
Kvaser Leaf v3	73-30130-01424-4
Kvaser Leaf Light v2	73-30130-00685-0
Kvaser U100	73-30130-01173-1
Kvaser USBcan Light 2xHS	73-30130-00714-7
Kvaser Memorator Pro 2xHS v2	73-30130-00819-9

Table 6: Kvaser interfaces which the Kvaser Air Bridge Utility CLI is supported by.

Installation

The installation should be performed as follows:

1. Install the Kvaser's SDK and Device guide driver, which can be downloaded from the Kvaser web site.
2. Copy the Kvaser Air Bridge Utility CLI file (`airbridge-utility-cli.exe`) to a file location according to own preference.
3. Install external dependencies from Microsoft: https://mpvci.b-cdn.net/MPVCI_2.7_setup.exe
4. Start the command window by clicking on the window's icon and type 'cmd' followed by ENTER.
5. Navigate to the preferred file location using appropriate commands, e.g:

   `cd Downloads`

6. Check that the Utility CLI file (`airbridge-utility-cli.exe`) is in the location (example: `C:\Users\AirBridgeUser\Downloads`) with the 'dir' command:

   $File_location >$ `dir`

7. The installation can e.g. be checked with the following command:

   $File_location >$ `airbridge-utility-cli.exe -h -v 3`

8. The Utility CLI will then respond with a general explanation of commands and parameters.

Preparations

The following is required to use the Kvaser Air Bridge Utility CLI:

- The Kvaser Air Bridge devices to be connected.
- A Kvaser interface (a list of interfaces that support Kvaser Air Bridge is given above).
- CAN bus wiring that connects the Kvaser Interface with the Kvaser Air Bridge Light HS.
- Correct termination of the CAN bus wiring (see Section 4.4, CAN bus termination, on Page 15) and power to the Kvaser Air Bridge.

Preparation of the physical installation for commissioning and firmware upgrade is performed in the following steps:

1. Connect the Kvaser interface (from the list above, e.g. Leaf v3) securely to the Kvaser Air Bridge device, making sure that the devices cannot be accidently disconnected from each other.
2. Apply power to the Kvaser Air Bridge. The device will perform the start-up test lighting up each of the three LEDs and then ending with one lit green LED.

Note: It is important that the CAN bus segment, i.e. connection between Kvaser interface and the Kvaser Air Bridge is properly terminated.

Configuration of CAN bus bit rate (recommended)

Prepare the physical installation according to the instructions above. Thereafter, perform the configuration of CAN bus bit rates according to the following:

1. Switch OFF the power to the Kvaser Air Bridge (the power only).
2. Configure the device's CAN bus bit rate by the following commands followed by ENTER:

   $File_location >$ `airbridge-utility-cli.exe -ch 0 -c -D -SAB 125`
   $File_location >$ `airbridge-utility-cli.exe -ch 0 -c -D -SAB 250`
   $File_location >$ `airbridge-utility-cli.exe -ch 0 -c -D -SAB 500`
   $File_location >$ `airbridge-utility-cli.exe -ch 0 -c -D -SAB 1000`
   $File_location >$ `airbridge-utility-cli.exe -ch 0 -c -D -SAB A`

   Note: The last parameter (125, 250, 500, 1000 and A) represent the CAN bus bit rate in kbit/s where an 'A' represents automatic bit rate detection and selection of one out of four bit rate pre-sets.
3. Switch ON the power to the Kvaser Air Bridge (the power only). When performed in the correct order the utility will display "Utility connected!" followed by various information.
4. Switch OFF the power to the Kvaser Air Bridge (the power only).

Checking the Configuration (recommended)

Prepare the physical installation according to the instructions above. Check the configured parameters according to the following:

1. Switch OFF the power to the Kvaser Air Bridge (the power only).
2. Check the configuration by the following commands followed by ENTER:

   $File_location >$ `airbridge-utility-cli.exe -ch 0 -c -D -LP`

3. Switch ON the power to the Kvaser Air Bridge (the power only). When performed in the correct order the utility will display "Utility connected!" followed by various information.
4. Switch OFF the power to the Kvaser Air Bridge (the power only).

Firmware upgrade

Prepare the physical installation as follows:

1. Connect the Kvaser interface securely to the Kvaser Air Bridge Light device, making sure that the devices cannot be accidently disconnected from each other.
2. Initiate the firmware upgrade using the following command followed by ENTER:

   $File_location >$ `airbridge-utility-cli.exe -ch 0 -c --upgrade`

3. Apply power to the Kvaser Air Bridge. The device will perform the start-up test lighting up each of the three LEDs and then ending with a lit green LED.

   Note: The power supply to the Kvaser Air Bridge must be cycled once before the configuration takes effect.

4.5.2 Command summary

This section contains all commands that are available for Kvaser Air Bridge Light HS in the Kvaser Air Bridge Utility CLI. The reboot argument '-R' can be appended to all commands[1] so that power cycling is not needed.

Please refer to the Kvaser Air Bridge Utility CLI for more information about each command.

[1] For Kvaser Air Bridge Light HS this flag may only be attached if the '-C' and '-D' flags have been provided and no power cycling has occurred afterwards.

General

- Generate a help menu:

  $File_location >$ `airbridge-utility-cli.exe -h`

- List available settings:

  $File_location >$ `airbridge-utility-cli.exe -c -ch 0 -D -LP`

- Upgrade firmware:

  $File_location >$ `airbridge-utility-cli.exe --channel 0 --connect --upgrade`

Commissioning of basic features and settings

- Configure the CAN bus bit rate:

  $File_location >$ `airbridge-utility-cli.exe -ch 0 -c -D -SAB [bit rate]`

  Available CAN bus bit rates are 125, 250, 500, 1000 and A kbit/s, where 'A' stands for automatic bit rate detection. The default value is A (auto).

5 Safety Instructions

5.1 Intended Use

The Kvaser Air Bridge Light HS is intended for connection of two CAN bus segments in a fixed installation.

5.2 Usage Warning



CAUTION: THE SURFACE OF THIS DEVICE MAY BECOME HOT IF IT IS EXPOSED TO FOR EXAMPLE RADIATION FROM THE SUN.



WARNING FOR ALL USERS

WARNING! - YOUR USE OF THIS DEVICE MUST BE DONE WITH CAUTION AND A FULL UNDERSTANDING OF THE RISKS!

THIS WARNING IS PRESENTED TO INFORM YOU THAT THE OPERATION OF THIS DEVICE MAY BE DANGEROUS. YOUR ACTIONS CAN INFLUENCE THE BEHAVIOR OF A CAN-BASED DISTRIBUTED EMBEDDED SYSTEM, AND DEPENDING ON THE APPLICATION, THE CONSEQUENCES OF YOUR IMPROPER ACTIONS COULD CAUSE SERIOUS OPERATIONAL MALFUNCTION, LOSS OF INFORMATION, DAMAGE TO EQUIPMENT, AND PHYSICAL INJURY TO YOURSELF AND OTHERS. A POTENTIALLY HAZARDOUS OPERATING CONDITION IS PRESENT WHEN THE FOLLOWING TWO CONDITIONS ARE CONCURRENTLY TRUE: THE PRODUCT IS PHYSICALLY INTERCONNECTED TO A REAL DISTRIBUTED EMBEDDED SYSTEM; AND THE FUNCTIONS AND OPERATIONS OF THE REAL DISTRIBUTED EMBEDDED SYSTEM ARE CONTROLLABLE OR INFLUENCED BY THE USE OF THE CAN NETWORK. A POTENTIALLY HAZARDOUS OPERATING CONDITION MAY RESULT FROM THE ACTIVITY OR NON-ACTIVITY OF SOME DISTRIBUTED EMBEDDED SYSTEM FUNCTIONS AND OPERATIONS, WHICH MAY RESULT IN SERIOUS PHYSICAL HARM OR DEATH OR CAUSE DAMAGE TO EQUIPMENT, DEVICES, OR THE SURROUNDING ENVIRONMENT.

WITH THIS DEVICE, YOU MAY POTENTIALLY:

- CAUSE A CHANGE IN THE OPERATION OF THE SYSTEM, MODULE, DEVICE, CIRCUIT, OR OUTPUT.
- TURN ON OR ACTIVATE A MODULE, DEVICE, CIRCUIT, OUTPUT, OR FUNCTION.
- TURN OFF OR DEACTIVATE A MODULE, DEVICE, CIRCUIT, OUTPUT, OR FUNCTION.
- INHIBIT, TURN OFF, OR DEACTIVATE NORMAL OPERATION.
- MODIFY THE BEHAVIOR OF A DISTRIBUTED PRODUCT.
- ACTIVATE AN UNINTENDED OPERATION.
- PLACE THE SYSTEM, MODULE, DEVICE, CIRCUIT, OR OUTPUT INTO AN UNINTENDED MODE.

ONLY THOSE PERSONS WHO:

(A) ARE PROPERLY TRAINED AND QUALIFIED WITH RESPECT TO THE USE OF THE DEVICE,

(B) UNDERSTAND THE WARNINGS ABOVE, AND

(C) UNDERSTAND HOW THIS DEVICE INTERACTS WITH AND IMPACTS THE FUNCTION AND SAFETY OF OTHER PRODUCTS IN A DISTRIBUTED SYSTEM AND THE APPLICATION FOR WHICH THIS DEVICE WILL BE APPLIED, MAY USE THE DEVICE.

PLEASE NOTE THAT YOU CAN INTEGRATE THIS PRODUCT AS A SUBSYSTEM INTO HIGHER-LEVEL SYSTEMS. IN CASE YOU DO SO, KVASER AB HEREBY DECLARES THAT KVASER AB'S WARRANTY SHALL BE LIMITED TO THE CORRECTION OF DEFECTS, AND KVASER AB HEREBY EXPRESSLY DISCLAIMS ANY LIABILITY OVER AND ABOVE THE REFUNDING OF THE PRICE PAID FOR THIS DEVICE, SINCE KVASER AB DOES NOT HAVE ANY INFLUENCE ON THE IMPLEMENTATIONS OF THE HIGHER-LEVEL SYSTEM, WHICH MAY BE DEFECTIVE.

6 Disposal and Recycling Information



When this product reaches its end of life, please dispose of it according to your local environmental laws and guidelines.

For information about Kvaser's recycling programs, visit:
https://www.kvaser.com/en/kvaser/recycling-policy.html

7 Legal acknowledgements

7.1 EU Regulatory Compliance

KVASER **EU Declaration of Conformity (DoC)**

We

Company Name:	Kvaser AB	City:	Mölndal
Postal address:	Aminogatan 25	Telephone number:	+46 31 886344
Postcode:	431 53	E-mail address:	sales@kvaser.com

declare that the DoC is issued under our sole responsibility and belongs to the following product:

Product: Kvaser Air Bridge Light HS

Object of the declaration (identification of apparatus allowing traceability):
Product: Kvaser Air Bridge Light HS
Type: 73-30130-00808-3

The object of the declaration described above is in conformity with the relevant Union harmonisation legislation:
Radio Equipment Directive (RED) 2014/53/EU (Art. 3.1a, 3.1b and 3.2)

RoHS recast Directive 2011/65/EU (Art. 4.1)

The following harmonised standards and technical specifications have been applied
(title, date of standard/specification):

EN 203 367 (2016-03 (1.1.0))

EN 300 328 (2016-11 (2.1.1))

EN 301 489-1 (2016-11 (2.1.1))

EN 301 489-17 (2016 (3.1.1))

EN 55032 (2012)

EN 62 368-1 (2014 + AC1:2015)

EN 50581 (2012)

Signed for and on behalf of:

Mölndal	2019-12-05	
Place of issue	Date of issue	Claes Haglund, Supply Chain and Quality Director

KVASER **EU Declaration of Conformity (DoC)**

We

Company Name:	Kvaser AB	City:	Mölndal
Postal address:	Aminogatan 25	Telephone number:	+46 31 886344
Postcode:	431 53	E-mail address:	sales@kvaser.com

declare that the DoC is issued under our sole responsibility and belongs to the following product:

Product: Kvaser Air Bridge Light HS M12

Object of the declaration (identification of apparatus allowing traceability):
Product: Kvaser Air Bridge Light HS M12
Type: 73-30130-01141-0

The object of the declaration described above is in conformity with the relevant Union harmonisation legislation:
Radio Equipment Directive (RED) 2014/53/EU (Art. 3.1a, 3.1b and 3.2)

RoHS recast Directive 2011/65/EU (Art. 4.1)

The following harmonised standards and technical specifications have been applied
(title, date of standard/specification):

EN 203 367 (2016-03 (1.1.0))

EN 300 328 (2016-11 (2.1.1))

EN 301 489-1 (2016-11 (2.1.1))

EN 301 489-17 (2016 (3.1.1))

EN 55032 (2012 + AC:2013)

EN 62 368-1 (2014 + AC:2015)

EN 50581 (2012)

Signed for and on behalf of:

Mölndal	2023-03-22	
Place of issue	Date of issue	Kent Lennartsson, Research Manager

7.2 FCC Regulatory Compliance

KVASER

Federal Communications Commission (FCC) Compliance Information Statement

IDENTIFICATION OBJECT:
Product: Kvaser Air Bridge Light HS
Type: 73-30130-00808-3

APPLICABLE COMPLIANCE STATEMENTS:
CFR Title 47 Part 15 §15.107, §15.109
This device complies with part 15 of the FCC Rules.
Operation is subject to the following two conditions:
(1) This device may not cause harmful interference, and
(2) this device must accept any interference received,
including interference that may cause undesired operation.

RESPONSIBLE PARTY (IN USA) NAME:
Kvaser Inc.
23881 Via Fabricante, Suite 503
Mission Viejo, CA 92691

Internet contact: support@kvaser.com

KVASER

Federal Communications Commission (FCC) Compliance Information Statement

IDENTIFICATION OBJECT:

Product: Kvaser Air Bridge Light HS M12
Type: 73-30130-01141-0

APPLICABLE COMPLIANCE STATEMENTS:

CFR Title 47 Part 15 §15.107, §15.109
This device complies with part 15 of the FCC Rules.
Operation is subject to the following two conditions:
(1) This device may not cause harmful interference, and
(2) this device must accept any interference received,
including interference that may cause undesired operation.

RESPONSIBLE PARTY (IN USA) NAME:

Kvaser Inc.
23881 Via Fabricante, Suite 503
Mission Viejo, CA 92691

Internet contact: support@kvaser.com

KVASER

Federal Communications Commission (FCC) Compliance Information Statement

IDENTIFICATION OBJECT:

Product: Kvaser Air Bridge Light HS (FCC)
Type: 73-30130-01008-6

APPLICABLE COMPLIANCE STATEMENTS:

CFR Title 47 Part 15 §15.107, §15.109
This device complies with part 15 of the FCC Rules.
Operation is subject to the following two conditions:
(1) This device may not cause harmful interference, and
(2) this device must accept any interference received,
including interference that may cause undesired operation.

RESPONSIBLE PARTY (IN USA) NAME:

Kvaser Inc.
23881 Via Fabricante, Suite 503
Mission Viejo, CA 92691

Internet contact: support@kvaser.com

KVASER

Federal Communications Commission (FCC) Compliance Information Statement

IDENTIFICATION OBJECT:

Product: Kvaser Air Bridge Light HS M12 (FCC)
Type: 73-30130-01148-9

APPLICABLE COMPLIANCE STATEMENTS:

CFR Title 47 Part 15 §15.107, §15.109
This device complies with part 15 of the FCC Rules.
Operation is subject to the following two conditions:
(1) This device may not cause harmful interference, and
(2) this device must accept any interference received,
including interference that may cause undesired operation.

RESPONSIBLE PARTY (IN USA) NAME:

Kvaser Inc.
23881 Via Fabricante, Suite 503
Mission Viejo, CA 92691

Internet contact: support@kvaser.com

7.3 Patents, Copyrights and Trademarks

All trademarks are the property of their respective owner. Windows is a registered trademark of Microsoft Corporation in the United States and other countries.

Adobe, the Adobe logo, and Reader are either registered trademarks or trademarks of Adobe Systems Incorporated in the United States and/or other countries.

DeviceNet is a trademark of Open DeviceNet Vendor Association, Inc.

NMEA 2000 is the registered trademark of the National Marine Electronics Association, Inc.

For information about Kvaser related CAN patents, see www.kvaser.com/patent.

The products described in this document are protected by U.S. patent 5,696,911.

8 Document Revision History

Version history for document UG_98208_air_bridge_light_hs:

Revision	Date	Changes
1.0	2018-09-04	Initial version.
2.0	2018-11-22	Corrected IP Rating and operating temperature, updated EU Regulatory Compliance.
2.1	2018-12-06	Clarified CAN Bit Rate.
2.2	2019-08-09	Url protocol updated.
3.0	2020-05-15	Added devices with M12 Connector, CAN bus termination chapter.
3.0	2020-05-15	Added devices with M12 Connector, CAN bus termination chapter.
4.0	2020-08-24	Corrected power pin of M12 Connector.
4.1	2022-04-01	Added galvanic isolation info (N/A) to Technical data table.
4.2	2023-03-22	Updated the Technical data table. Added section about intended use. Minor textual changes.
4.3	2024-03-15	Updated Kvaser logo.
5.0	2024-09-16	Updated the Kvaser Air Bridge Light HS user guide.
5.1	2024-11-21	Clarified the minimum distance between two devices.
5.2	2025-02-05	Added list of Utility CLI commands. Updated information about separation within and between pairs. Minor textual changes.