Kvaser Memorator R SemiPro User's Guide



Copyright 2011-2025 Kvaser AB, Mölndal, Sweden
https://www.kvaser.com

Printed Monday 17th February, 2025

We believe that the information contained herein was accurate in all respects at the time of printing. Kvaser AB cannot, however, assume any responsibility for errors or omissions in this text. Also note that the information in this document is subject to change without notice and should not be construed as a commitment by Kvaser AB.

(This page is intentionally left blank.)

Contents

1 About this manual **5**

2 Introduction **6**
2.1 Welcome to Kvaser Memorator R SemiPro 6
2.2 Major features of Kvaser Memorator R SemiPro 7
2.3 CAN logger Functions 8
2.4 Real time CAN-USB interface 8
2.5 Kvaser Memorator Tools 9
2.6 Additional software and documentation 9

3 Kvaser Memorator R SemiPro Hardware **10**
3.1 Hardware installation 10
3.2 USB connector 10
3.3 CAN channels 11
3.4 Power supply 11
3.5 Flash disk 11
3.6 LED indicators 11
3.7 External trigger input 14
3.8 External trigger output 16

4 How to use the Kvaser Memorator R SemiPro **18**
4.1 Use as a CAN interface 18
4.2 Configure for logging 18
4.3 Use as a logger 18
4.4 Kvaser Memorator Tools 19
4.5 Troubleshooting 19

5 Appendices **20**
5.1 System requirements 20
5.2 Technical data 20
5.3 Performance 22
5.4 Disk capacity 22
5.5 CAN connectors 22
5.6 Updating the firmware 24
5.7 Required software versions 26
5.8 CAN bus termination 26
5.9 CAN bus overrun 27
5.10 Daisy-chaining several interfaces 27

6 Frequently Asked Questions **28**

7 Safety Instructions **29**
7.1 Intended Use 29

7.2 Usage Warning 29

8 Disposal and Recycling Information 30

9 Legal acknowledgements 32
9.1 EC Regulatory Compliance 32
9.2 FCC Regulatory Compliance 33
9.3 Patents, copyrights and trademarks 34

10 Document revision history 35

1 About this manual

This manual is intended for Kvaser Memorator R SemiPro users. This document contains a description of the hardware's properties and general instructions for connecting the device to a computer. The setup software for the Kvaser Memorator R SemiPro is called Kvaser Memorator Tools and is described in detail in its online help.

2 Introduction

This section will describe the functions and features of the Kvaser Memorator R SemiPro.

2.1 Welcome to Kvaser Memorator R SemiPro



Figure 1: Kvaser Memorator R SemiPro

Kvaser Memorator R SemiPro is a small, yet advanced portable CAN data logger. The device can be configured in many different ways to achieve the most suitable and effective logging for any occasion. Connecting the logger to a host computer provides direct access for configuring baud rates, trigger conditions and filters using the standalone Kvaser Memorator Tools.

Kvaser Memorator R SemiPro can **also** be used as a powerful two channel real time CAN to USB interface – two products in one!

An additional advantage of the Kvaser Memorator R SemiPro is that it is possible to log traffic on J1587, by connecting the Kvaser Linx J1587 to your Kvaser Memorator R SemiPro you will get an even more powerful and versatile data logger.

To achieve a rugged design, Kvaser Memorator R SemiPro has it's SD-disk located inside the unit and soldered to the PCB. This ensures error free operation even when exposed to vibration and shock.

This guide is applicable to the Kvaser Memorator R SemiPro devices listed in Table 1 on Page 7.

Device	Product Number
Kvaser Memorator R SemiPro	73-30130-00490-0

Table 1: Kvaser Memorator R SemiPro device and its EAN number.

Throughout this document, we use the name Kvaser Memorator R SemiPro to mean any one of the different Kvaser Memorator R SemiPro products listed in Table 1, unless otherwise noted.

2.1.1 Triggers

You can setup the Kvaser Memorator R SemiPro to log continuously, or you can create triggers to control when frames are logged. You can create up to 16 trigger conditions. These conditions can include the reception of a specific message, the value of a specific signal in a message, or an external trigger input's rising or falling edge. You can define a post-trigger time to control the amount of data logged after the trigger expression becomes false, and/or a pre-trigger time to log events leading up to the trigger expression becoming true.

2.1.2 Memory cards

To achieve a rugged and robust product, the memory card (a SD disk) is placed inside the shell and cannot be replaced.

2.2 Major features of Kvaser Memorator R SemiPro

- CAN interface and data logger – two products in one.
- Quick and easy plug-and-play installation.
- Supports both 11-bit (CAN 2.0A) and 29-bit (CAN 2.0B active) identifiers.
- CAN messages are time-stamped with 2 µs resolution.
- Large on-board RAM buffer for CAN messages.
- Supports silent (listen-only) mode for analyzing tools and data logging.
- 100% compatible with applications written with Kvaser CANlib for other Kvaser hardware such as LAPcan, PCIcan, and USBcan.
- Two high-speed CAN channels (compliant with ISO 11898-2), 10 kbit/s up to 1 Mbit/s.
- Fully compatible with J1939, CANopen, NMEA 2000 and DeviceNet.
- One USB 2.0 HiSpeed connection with data rates up to 480 Mbit/s. The device can also be used in USB 1.1 slots (with up to 12 Mbit/s).

- Power is taken from the CAN bus or from the USB bus. The device automatically switches power supply between the CAN (primary) and the USB (secondary), reducing power drain on a laptop's battery.
- Small, light aluminum housing with approximate dimensions 31 x 220 x 19 mm (1.2 x 8.7 x 0.8 inches; W x L x H) – easy to tuck away (e.g. in a vehicle during a test drive).
- The CAN cable is 40 cm (16 inches).
- The USB cable is 10 cm (4 inches).

2.3 CAN logger Functions

- One fixed 4GB memory card.
- Built-in real time (calendar) clock with battery backup.
- Easy to use graphic configuration tool.
- Logger status is indicated with five externally visible LEDs.
- Supports silent mode – you can log bus traffic without interfering with it.
- Handles 100% bus load at 1 Mbit/s with two channels (>20000 messages per second).
- Short start up time.
- Upload logged data via USB at 1.2 MB/s when connected via USB 2.0 HiSpeed.
- External trigger input (e.g. pushbutton).
- External trigger output (e.g. a LED or buzzer).
- Pretrigger space is limited by available disk space only.
- Select trigger signals from a CAN database, or define them directly in Kvaser Memorator Tools.

2.4 Real time CAN-USB interface

- Uses USB 2.0 HiSpeed, while maintaining compatibility with USB 1.x computers.
- Supports extreme data throughput, quick reaction times and precise time stamping – removing any bottlenecks. Handles up to 40000 messages per second.
- Kvaser MagiSync – automatic time synchronization between all Kvaser products that uses the Kvaser MagiSync feature.
- Supports silent mode for analyzing tools – listen to the bus without interfering with it.
- Supports simultaneous usage of multiple Kvaser interfaces.
- Power supplied through the CAN bus interface or through the USB interface.

2.5 Kvaser Memorator Tools

- Easy to use graphic configuration tool.
- File manager for organizing and converting log files to a variety of formats, including CSV, ASCII, MDF and Matlab formats.
- Configuration of the CAN controller (bit rate and filters).
- Configuration of the trigger conditions.
- Configuration of message filters which controls the messages stored.
- The configuration is downloaded via USB.

2.6 Additional software and documentation

The Kvaser CANlib SDK includes everything you need in order to develop software applications interacting with Kvaser CAN and LIN hardware. The SDK contains full documentation and many sample programs, written in C, C++, C#, Delphi, Python and Visual Basic. Kvaser CAN and LIN hardware is built around the same common software API. Applications developed using one device type will run without modification on other device types.

The latest versions of documentation, software and drivers can be downloaded for free at www.kvaser.com/download.

3 Kvaser Memorator R SemiPro Hardware

In this section you can read more about the CAN channels, power supply, flash disks, LED indicators, and external triggers.

3.1 Hardware installation

For the Kvaser Memorator R SemiPro to communicate with the host computer, a compatible version of the Kvaser driver and firmware must be installed.

After the driver has been installed on the host computer, the firmware may then be downloaded and installed on the Kvaser Memorator R SemiPro.

The latest version of the driver and firmware can be downloaded from www.kvaser.com/download.

The driver is installed by running the file `kvaser_drivers_setup.exe`.

The Kvaser Memorator R SemiPro may be inserted in any free USB socket on the host computer. You do not need to switch the power off before inserting or removing the device.

For information on how to upgrade the firmware, see Section 5.6, Updating the firmware, on Page 24.

The delivery package of Kvaser Memorator R SemiPro contains:

- Kvaser Memorator Professional.
- Adapter cable for a 15 pin D-SUB to 2 x 9 pin D-SUB.

For driver installation information, see the driver and hardware installation guide which can be found at www.kvaser.com/download.

3.2 USB connector

The Kvaser Memorator R SemiPro has a standard USB type "A" plug connector. Connect the device to your computer using any high quality USB 2.0 certified cable. The maximum total USB cable length is 5 m (~ 16 ft).



As USB cables become longer they are more sensitive to EMI, because they make a longer antenna that can pick up more noise. These issues can be mitigated by using higher quality cables with better shielding. Thicker cables tend to be better than thin ones, and braided shielding tends to be more reliable than only foil. Furthermore, longer cables may introduce signal degradation and timing issues that, if necessary, can be mitigated using shorter cable segments combined with hubs that amplify the signal and handle delays on a per-cable basis.

3.3 CAN channels

The standard Kvaser Memorator R SemiPro has two independent CAN channels in the 15 pin D-SUB. The product comes with an adapter cable to split the two channels into two separate connectors if necessary. The CAN connectors in the adapter cable are also labeled for easy identification.

3.4 Power supply

The Kvaser Memorator R SemiPro can be powered through the CAN connector and through the USB connector. To operate the Kvaser Memorator R SemiPro in logger mode, you **must** supply power through the CAN connector.

When you supply power on the CAN connector, provide power on channel 1. See Section 5.5, CAN connectors, on Page 22 for information on how to connect power to the adapter cable or directly on the 15 pin D-SUB.

The supply power should be in the range of 6 V to 35 V DC. The power requirement is around 1 W (maximum). Supplying power on CAN2 is safe, but pointless. The device will tolerate higher input voltages, up to 48 V DC.

To use the device as a CAN interface or to configure the device for logging, power supplied through the USB connector is sufficient.

3.5 Flash disk

Due to the high demands placed on a rugged, industrial product such as the Kvaser Memorator R SemiPro, the memory card is fixed and sealed inside the unit. The card meets necessary performance requirements including industrial temperature range.

The selected size of 4 GB should cover most cases. This size provides a balance between duration logging and overly large logs which are cumbersome to analyze.

3.6 LED indicators

The LED indicators (see Figure 2 on Page 12) have somewhat different meaning depending on how your Kvaser Memorator R SemiPro is being used – as a CAN interface or as a CAN logger. The following tables describe how the LEDs behave in these two cases.

Lamp	General meaning
PWR (Green)	Power and general status.
ERR (Red)	Indicates permanent errors.
INFO (Orange)	Indicates temporary errors.
CAN 1 (Yellow)	Status for CAN channel 1.
CAN 2 (Yellow)	Status for CAN channel 2.

Table 2: LED indicators overview



Figure 2: LEDs on the Kvaser Memorator R SemiPro

PWR (Green)	CAN 1 (Yellow)	CAN 2 (Yellow)	ERR (Red)	INFO (Orange)	Meaning
slow flash					Waiting for USB connection with the host computer.
steady					Power ON (The device is connected to the computer).
	short flash				CAN traffic on channel 1. (The light becomes steady at high bus loads).
		short flash			CAN traffic on channel 2. (The light becomes steady at high bus loads).
	blink				CAN 1 *error passive*.
		blink			CAN 2 *error passive*.
	steady				CAN 1 *bus off*.
		steady			CAN 2 *bus off*.
				short flash	Error frame on either channel
			steady		Self-test failed, wrong bit rate, CAN bus transceiver failure.
fast flash					Firmware configuration error (should not normally happen, so please contact support).

Table 3: LED indicators when used as a CAN interface

CAN1/CAN2 (Yellow)	ERR (Red)	INFO (Orange)	Meaning
short flashes			CAN messages are sent or received.
blinking	blinking		The CAN channel is *error passive*.
blinking slowly	blinking slowly		The CAN channel is *bus off*.
		short flashes	Error frames are received on CAN1/CAN2.

Table 4: CAN status when the device is used as a logger

ERR (Red)	INFO (Orange)	Meaning
constant	single flash	CAN overrun
constant	double flash	Disk full
constant	three flashes	Configuration file missing or corrupt.
constant	four flashes	Disk error; try to reformat it.
constant	five flashes	Some other major error; please contact support.

Table 5: Error conditions when the device is used as a logger

PWR (Green)	Meaning
90% on and 10% off	Everything OK; logging started without problems. The device is "armed" and waiting for a trigger.
flashing	Everything OK, logging is active and actively logging traffic.
blinking slowly 50/50	Logging has stopped due to a trigger condition and Kvaser Memorator R SemiPro is off bus.

Table 6: Logging status when the device is used as a logger

PWR (Green)	CAN 1 (Yellow)	CAN 2 (Yellow)	ERR (Red)	INFO (Orange)	Meaning
	"running lights" on all LEDs				The device is communicating with the tool.
				blinking	Disk activity such as formatting.

Table 7: When connected to Kvaser Memorator Tools

PWR (Green)	CAN 1 (Yellow)	CAN 2 (Yellow)	ERR (Red)	INFO (Orange)	Meaning
	All LEDs blinking slowly				Disk is not detected by the CPU, and there is no USB communication. If this happens, it is probably a hardware fault.
flashing every few seconds					No USB communication. Check USB cables and communication. Unplug the device and reconnect after a few seconds. Check that the device driver is installed correctly.
flashing			constant		Firmware configuration error. This should not normally happen. Please contact support.

Table 8: Other blink patterns when the device is used as a logger

3.7 External trigger input

The Kvaser Memorator R SemiPro can be set up to trigger on an external signal. There are two ways to create this signal:

- On the 9 pin CAN1 connector, connect a switch from pin 4 to ground, which can be found on pin 3 of the same connector. See Figure 4 on Page 16.
- On the 9 pin CAN1 connector, connect a signal between 0 and 5 V to pin 4.

Internally, pin 4 on the 9 pin CAN1 connector has a pull-up to 5 V. See Figure 3 on Page 15.

The trigger can be configured to react on both falling and rising edges.

- If the trigger is configured to react to a falling edge, the trigger is activated when pin 4 is connected to ground.
- If the trigger is configured to react to a rising edge, the trigger is activated when pin 4 is disconnected from ground.

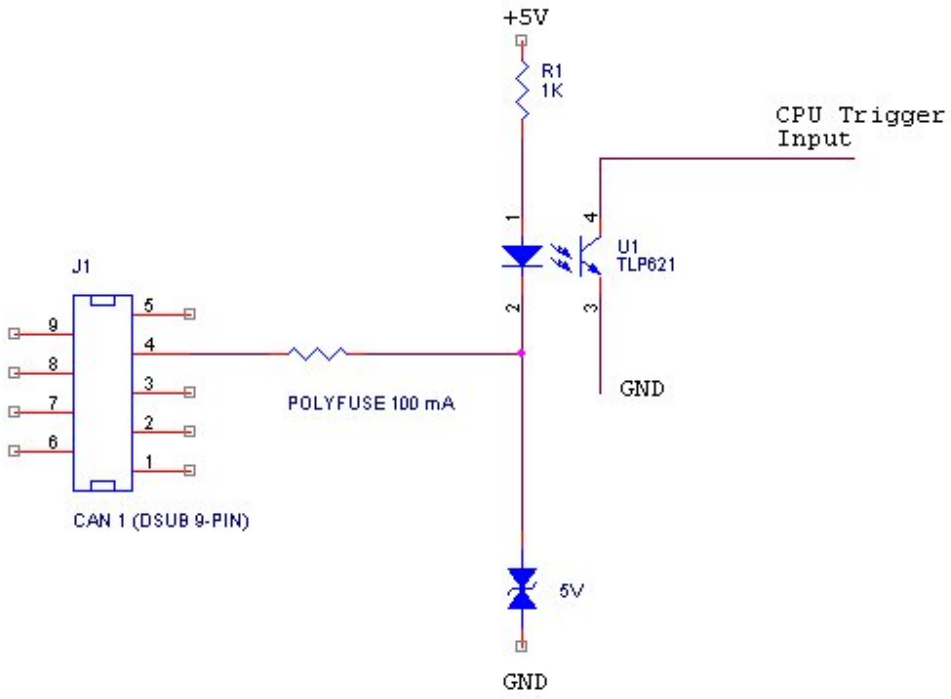

Figure 3: The trigger input inside the Kvaser Memorator R SemiPro

The trigger input is debounced by the firmware. A pulse must have a minimum duration of approximately 30 ms to be detected.

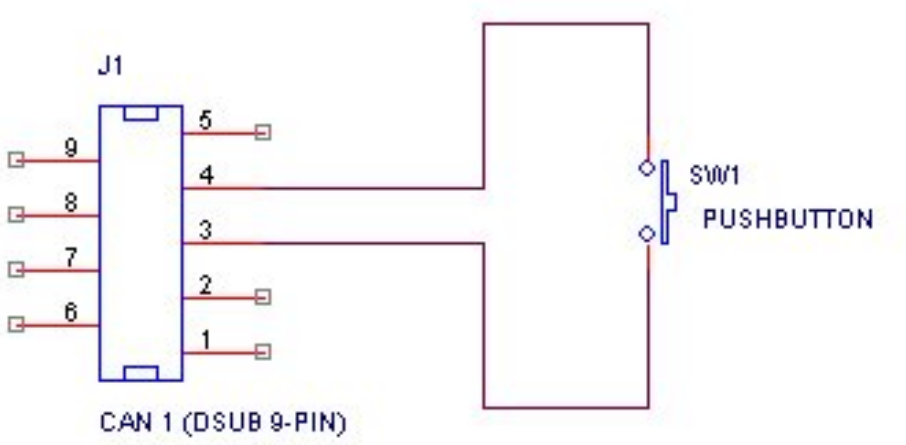

Figure 4: How to connect an external trigger switch

3.8 External trigger output

The Kvaser Memorator R SemiPro can also be configured to send an external pulse on pin 4 of the 9 pin CAN2 connector. For further information on how to configure the Kvaser Memorator R SemiPro to send an external pulse, please refer to the Kvaser Memorator Tools online help.

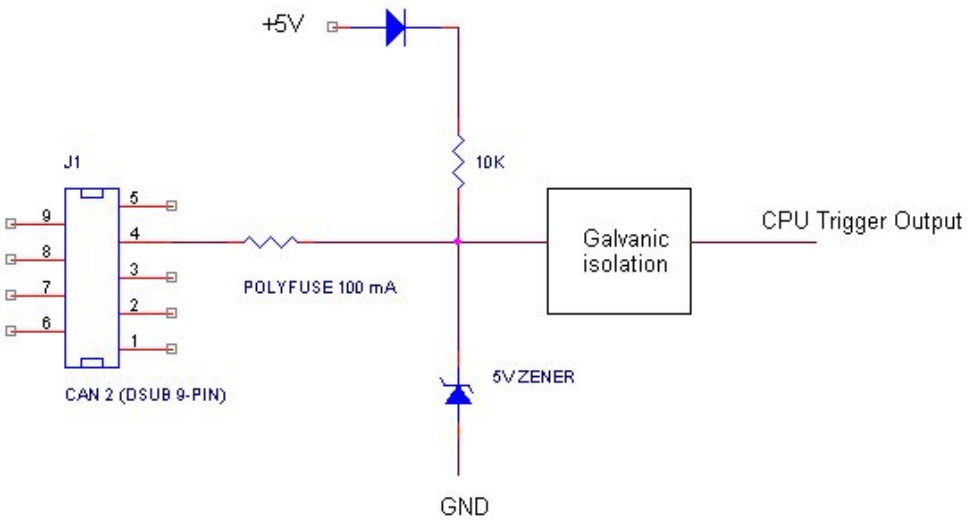

Figure 5: The trigger output inside the Kvaser Memorator R SemiPro

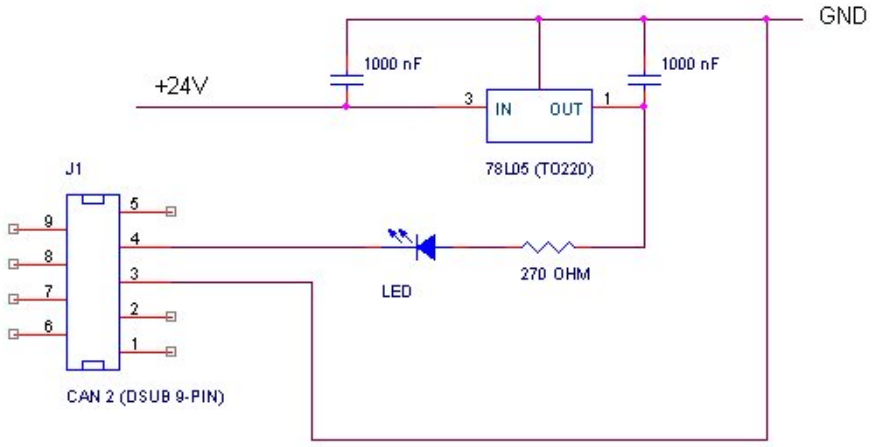

Figure 6: Sample circuit for connecting a LED to the trigger output

4 How to use the Kvaser Memorator R SemiPro

The Kvaser Memorator R SemiPro can operate both as a high performance real time USB interface (USB-CAN mode) and as a data logger (logger mode). This section will describe how to use the different modes.

4.1 Use as a CAN interface

To use the Kvaser Memorator R SemiPro as a CAN interface; connect the unit to a free USB socket on your host computer or USB hub.



When used as a CAN interface, the green LED will be illuminated and the yellow LEDs will emit short flashes when CAN messages are transmitted and received.

4.2 Configure for logging

To prepare your Kvaser Memorator R SemiPro for logging:

1. Connect the unit to a free USB socket on your host computer or USB hub.
2. Start the Kvaser Memorator Tools program and press the Connect button.

The device should immediately show a running light pattern on the LEDs.

4.3 Use as a logger

To use your Kvaser Memorator R SemiPro as a logger:

1. Ensure the unit has a valid configuration. Optionally, connect an external trigger switch to the CAN1 connector.
2. Optionally, connect the digital output pin on the CAN2 connector to your equipment.
3. Supply power on the CAN1 connector.

Logging will start based on the configuration downloaded to the unit. This could be immediately on power or delayed until a trigger condition is met.



If everything is OK, the green PWR LED should either blink quickly, or be illuminated 90% and dark 10% of the time. If CAN traffic is detected, the CAN1 and CAN2 LEDs should be illuminated.

4.4 Kvaser Memorator Tools

To log CAN traffic with the Kvaser Memorator R SemiPro, you need to create and download a configuration to the device. The Kvaser Memorator R SemiPro needs to be connected by the USB connector to a host computer. Start the Kvaser Memorator Tools application and press the Connect button in the toolbar. If the LEDs on Kvaser Memorator R SemiPro are flashing in a "running light" pattern, the device is ready to communicate with the Kvaser Memorator Tools program.

For further information about Kvaser Memorator Tools please refer to the application's online help.

4.5 Troubleshooting



- Use "Kvaser Device Guide" in the Control Panel to verify that the computer really can talk to the Kvaser Memorator R SemiPro. Read out the firmware version. If it's all zeros, there are communication problems.
- Verify that the disk is formatted. If in doubt, reformat it using the Kvaser Memorator Tools.
- If configuration fails, verify that the Kvaser Memorator R SemiPro is in configuration mode when you are using the Kvaser Memorator Tools. You can see this by looking at the LEDs – they should flash in "running light" fashion.
- Examine the pattern of flashing/illuminated LEDs on the unit. Compare the observed pattern against those described in Section 3.6, LED indicators, on Page 11.
- If the LEDs are not flashing or illuminated at all, check the power supply.

5 Appendices

In this section you will find technical information about Kvaser Memorator R SemiPro and its connectors.

5.1 System requirements

A USB interface. Use USB 2.0 HiSpeed for optimum results, although the device will work with a USB 1.1 interface too.

5.2 Technical data

In Table 9 on Page 21 you will find the Kvaser Memorator R SemiPro's technical specifications.

CAN Channels	2 (CAN 2.0A and 2.0B active).
CAN Transceivers (HS)	SN65HVD251 (Compliant with ISO 11898-2)
CAN Controller	Built into the M32C
Microcontroller	Renesas M32C
Galvanic isolation	Yes
CAN Bit Rate	10 kbit/s to 1 Mbit/s
Timestamp resolution	2 µs
Error Frame Detection	Yes, both channels.
Error Frame Generation	Yes, when used as a USB-CAN interface.
Kvaser t programming	No
Kvaser CANtegrity	No
Host interface	USB 2.0. Supports HiSpeed (HS) at 480 Mbit/s. Compatible with USB 1.1 at 12 Mbit/s.
Host OS	Windows (7 or later), Linux.
Power consumption	~5 V and 130 mA if powered from the USB and ~850 mW if powered from the CAN connector.
External power	Power via the 15 pin D-SUB or the 9 pin D-SUB for channel 1.
Minimum operating voltage	6.2 V DC (cold start) and 5.6 V DC (during operation).
Maximum operating voltage	35 V DC.
Absolute maximum input voltage	48 V DC.
Hardware configuration	Done by software (Plug & Play).
Dimensions (W x L x H)	31 x 220 x 19 mm (1.2 x 8.7 x 0.8 inch)
Operating temperature	−40 °C to +85 °C
Weight	179 g including cables and connectors. The adapter cable will add another 77 g.
Storage temperature	−40 °C to +85 °C
Relative Humidity	0% to 95% (non-condensing.)
External trigger	Available in 15 pin D-SUB at pin relative ground pin 1 or on CAN1 pin 4. The input is protected by a self-healing fuse and has a 1 kΩ pull-up to +5 V. The firmware can detect both rising and falling edges. The allowed voltage is 0 V to 5 V DC relative to channel 1 ground.
External output	Available in 15 pin D-SUB at pin 5 relative to ground at pin 11 or on CAN2 pin 4. The output is a pull-down to ground and is protected by a self-healing fuse. The allowed voltage is 0 V to 5 V DC.

Table 9: Kvaser Memorator R SemiPro Technical specifications



The two CAN channels are galvanically separated. Therefore, when connecting both channels to the same bus, each channel's ground must be connected.



When running in temperatures below −30 °C (−20 °F), the **Time to live** setting must be set to 0 seconds in the logging configuration.

5.3 Performance

	Kvaser Memorator R SemiPro
RX performance per channel (when used as a CAN interface)	20 000 messages/s
TX performance per channel (when used as a CAN interface)	20 000 messages/s
Logging performance	20 000 messages/s
Time stamp accuracy	2 µs
Message filter support	Stop filters Pass filters Counting filters
Memory card	4 GB, fixed
Upload of logged data	1.4 MB/s (when connected via USB 2.0 HiSpeed)
Galvanic isolation	Yes
Number of triggers	16
Startup time when used as a logger	500 ms

Table 10: Performance of the Kvaser Memorator R SemiPro

5.4 Disk capacity

Each CAN message occupies 24 bytes in the log file. Table 11 gives an approximate value of the capacity of the built-in disk.

Disk size	**Approximate capacity**	**Approximate time to fill the disk (at 500 messages per second)**
4 GB	155,000,000 messages	46h

Table 11: Disk capacity

5.5 CAN connectors

The Kvaser Memorator R SemiPro has two CAN channels.

The device has a 15 pin D-SUB, its pin configuration is described in Table 12 on Page 23. With the cable adapter, the connection is split into two standard 9 pin D-SUB connectors with pinning as shown in Table 13 on Page 24 and Table 14 on Page 24.

The two ground connections for the two channels are galvanically separated in the unit.

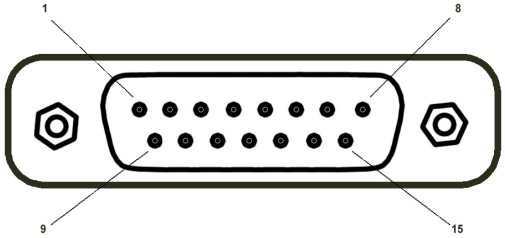

Figure 7: The 15-pin D-SUB connector

D-SUB pin number	Function
1	Power, relative GND on channel 1
2	CAN_L, channel 1
3	External trigger input, relative GND on channel 1
4	CAN_L, channel 2
5	External trigger output, relative GND on channel 2
6	Not connected
7	Not connected
8	Not connected
9	Ground, channel 1
10	CAN_H, channel 1
11	Ground channel 2
12	CAN_H, channel 2
13	Not connected.
14	Not connected.
15	Shield channel 2
Shell	Shield channel 1
Self-healing fuses protect all pins except GND and shield	

Table 12: 15 pin D-SUB configuration

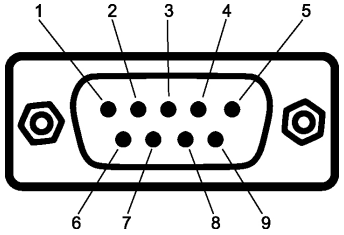

Figure 8: The D-SUB connector

D-SUB pin number	Function
1	Not connected
2	CAN_L
3	GND
4	External trigger input
5	Shield
6	Not connected
7	CAN_H
8	Not connected
9	Power supply to the device
Shell	Shield channel 1
Self-healing fuses protect Pins 2, 3, 4, 7 and 9.	

Table 13: 9 pin D-SUB configuration (CAN channel 1)

D-SUB pin number	Function
1	Not connected
2	CAN_L
3	GND
4	External trigger output
5	Shield
6	Not connected
7	CAN_H
8	Not connected
9	Not connected
Shell	Shield channel 2
Self-healing fuses protect Pins 2, 3, 4, 7 and 9.	

Table 14: 9 pin D-SUB configuration (CAN channel 2)



Always connect the ground pin on the D-SUB to the ground of your CAN bus.

5.6 Updating the firmware

The Kvaser Memorator R SemiPro's firmware can be updated using the Kvaser Memorator Tools application or our standalone firmware update program. For instructions on using the Kvaser Memorator Tools application to update the device's firmware, read the application's online help.

To use the standalone firmware update program, connect the Kvaser Memorator R SemiPro to your host computer with the USB cable. Double-click on the file

"update.exe". A small application opens where you should see the device listed if correctly connected to your host computer (see Figure 9 on Page 25). Select the device to program and click the Next button.

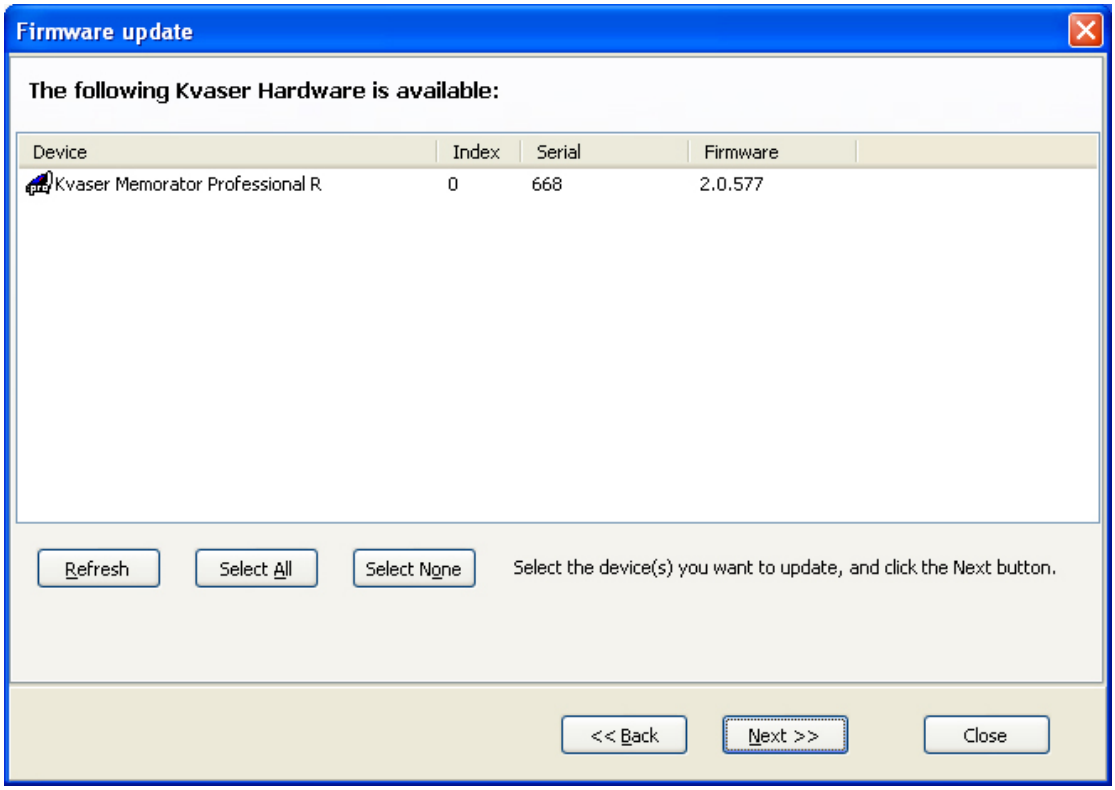

Figure 9: Firmware update, select device

Click on the *Start Upgrade* button to start programming (see Figure 10 on Page 26). The programming takes approximately 20 seconds. The progress is printed on the screen, and typically looks like Figure 10 on Page 26.



No error messages should appear. If you see error messages, try to disconnect and reconnect the device, and then perform the operation again.

To verify that the firmware is updated, double-click on "Kvaser Device Guide" in the Control Panel. Select "Kvaser Memorator R SemiPro" in the tree view to the left, and click on either channel. The firmware revision information appears in the right half of the window.

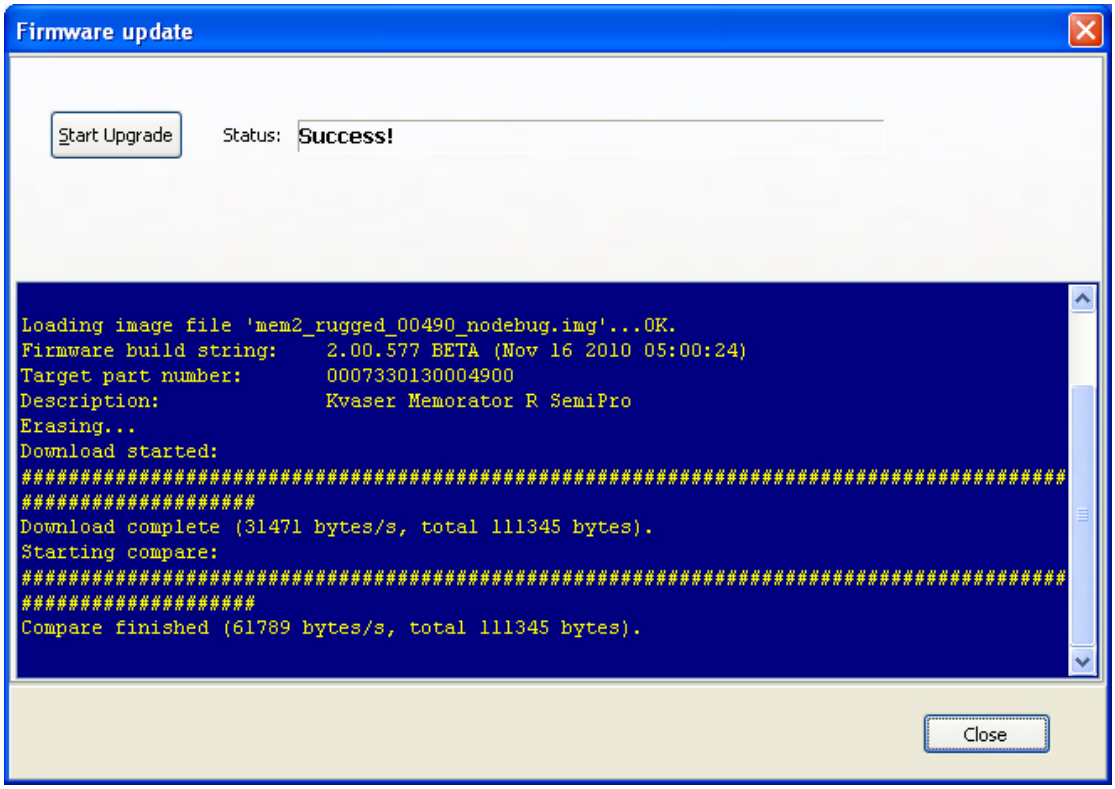

Figure 10: Firmware update, start upgrade.

5.7 Required software versions

- You need at least driver (CANlib) version 4.3 to use your Kvaser Memorator R SemiPro.
- Kvaser Memorator Tools must be version 2.7 or later.

5.8 CAN bus termination

Every CAN bus must be terminated with a 120 Ω resistor at each end of the bus. The Kvaser Memorator R SemiPro does not contain any CAN bus terminators, because their inclusion could cause severe disturbance in a system which is already correctly terminated.

For laboratory or testing use, the exact value of the termination resistors is not always critical. Sometimes a single terminator is sufficient. For production, proper termination is essential. If you see error frames on the bus, you should check the termination.



To save yourself a lot of trouble, always terminate the CAN bus properly

5.9 CAN bus overrun

Under extremely heavy load with high signaling rates and long bursts of messages, the Kvaser Memorator R SemiPro may lose messages. This loss is a rare occasion, and if such a loss occurs the setup displays a notification message when the file is extracted. Several of the file formats that support this feature also indicate when the overrun occurred. (See the help section in Kvaser Memorator Tools for details about file formats.)



To avoid losing important messages during logging, filters can be used. This will decrease the load on the Kvaser Memorator R SemiPro and ensure that important information is not lost.

5.10 Daisy-chaining several interfaces

You can daisy chain several Kvaser Memorator R SemiPro units to gain additional logging capacity. To do this,

- Connect the trigger output of one device to the trigger input of the next device.
- Using the Kvaser Memorator Tools, configure the trigger output of the first device to emit a pulse when the disk becomes full.
- Configure the trigger input of the second device to start logging when a falling edge is detected. Set the post-trigger time to 0 (infinite) and the pre-trigger time to 1 second.

You now have a setup where the second unit starts logging when the first one becomes full.

6 Frequently Asked Questions

Q: How many messages per second can Kvaser Memorator R SemiPro store on the disk?

A: The disk can typically accommodate 20000 messages per second. For all practical purposes, this means full busload even at 1 Mbit/s.

Q: I have a very busy J1939 network. Will the Kvaser Memorator R SemiPro be able to handle that?

A: Most likely. J1939 operates at 250 kbit/s, which means up to 2000 8 byte messages per second. As a contrast, the measured logging capacity of the Kvaser Memorator R SemiPro is 20000 messages per second, which is around 10 times higher.

Q: How many hours will the built-in memory card last?

A: The duration you can log depends on the CAN bus load. To get a feeling for the numbers involved, see Section 5.4, Disk capacity, on Page 22.

Q: I have logged a lot of data on my Kvaser Memorator R SemiPro and now I'm trying to open the list of files inside the Kvaser Memorator Tools, but it seems to hang. What's up?

A: If the logger was interrupted while writing to the disk, the device might, on certain rare occasions, need a long time to extract the list of files. This is because the software needs to rebuild certain internal data structures first. Please be patient – eventually the list of files will appear.

7 Safety Instructions

7.1 Intended Use

Kvaser interfaces are used to connect computer systems to CAN buses. The Kvaser Memorator R SemiPro is intended for connection to a computer via the USB port.

7.2 Usage Warning



WARNING FOR ALL USERS

WARNING! - YOUR USE OF THIS DEVICE MUST BE DONE WITH CAUTION AND A FULL UNDERSTANDING OF THE RISKS!
THIS WARNING IS PRESENTED TO INFORM YOU THAT THE OPERATION OF THIS DEVICE MAY BE DANGEROUS. YOUR ACTIONS CAN INFLUENCE THE BEHAVIOR OF A CAN-BASED DISTRIBUTED EMBEDDED SYSTEM, AND DEPENDING ON THE APPLICATION, THE CONSEQUENCES OF YOUR IMPROPER ACTIONS COULD CAUSE SERIOUS OPERATIONAL MALFUNCTION, LOSS OF INFORMATION, DAMAGE TO EQUIPMENT, AND PHYSICAL INJURY TO YOURSELF AND OTHERS. A POTENTIALLY HAZARDOUS OPERATING CONDITION IS PRESENT WHEN THE FOLLOWING TWO CONDITIONS ARE CONCURRENTLY TRUE: THE PRODUCT IS PHYSICALLY INTERCONNECTED TO A REAL DISTRIBUTED EMBEDDED SYSTEM; AND THE FUNCTIONS AND OPERATIONS OF THE REAL DISTRIBUTED EMBEDDED SYSTEM ARE CONTROLLABLE OR INFLUENCED BY THE USE OF THE CAN NETWORK. A POTENTIALLY HAZARDOUS OPERATING CONDITION MAY RESULT FROM THE ACTIVITY OR NON-ACTIVITY OF SOME DISTRIBUTED EMBEDDED SYSTEM FUNCTIONS AND OPERATIONS, WHICH MAY RESULT IN SERIOUS PHYSICAL HARM OR DEATH OR CAUSE DAMAGE TO EQUIPMENT, DEVICES, OR THE SURROUNDING ENVIRONMENT.
WITH THIS DEVICE, YOU MAY POTENTIALLY:

- CAUSE A CHANGE IN THE OPERATION OF THE SYSTEM, MODULE, DEVICE, CIRCUIT, OR OUTPUT.
- TURN ON OR ACTIVATE A MODULE, DEVICE, CIRCUIT, OUTPUT, OR FUNCTION.
- TURN OFF OR DEACTIVATE A MODULE, DEVICE, CIRCUIT, OUTPUT, OR FUNCTION.
- INHIBIT, TURN OFF, OR DEACTIVATE NORMAL OPERATION.
- MODIFY THE BEHAVIOR OF A DISTRIBUTED PRODUCT.
- ACTIVATE AN UNINTENDED OPERATION.
- PLACE THE SYSTEM, MODULE, DEVICE, CIRCUIT, OR OUTPUT INTO AN UNINTENDED MODE.

ONLY THOSE PERSONS WHO:
(A) ARE PROPERLY TRAINED AND QUALIFIED WITH RESPECT TO THE USE OF THE DEVICE,
(B) UNDERSTAND THE WARNINGS ABOVE, AND
(C) UNDERSTAND HOW THIS DEVICE INTERACTS WITH AND IMPACTS THE FUNCTION AND SAFETY OF OTHER PRODUCTS IN A DISTRIBUTED SYSTEM AND THE APPLICATION FOR WHICH THIS DEVICE WILL BE APPLIED, MAY USE THE DEVICE.
PLEASE NOTE THAT YOU CAN INTEGRATE THIS PRODUCT AS A SUBSYSTEM INTO HIGHER-LEVEL SYSTEMS. IN CASE YOU DO SO, KVASER AB HEREBY DECLARES THAT KVASER AB'S WARRANTY SHALL BE LIMITED TO THE CORRECTION OF DEFECTS, AND KVASER AB HEREBY EXPRESSLY DISCLAIMS ANY LIABILITY OVER AND ABOVE THE REFUNDING OF THE PRICE PAID FOR THIS DEVICE, SINCE KVASER AB DOES NOT HAVE ANY INFLUENCE ON THE IMPLEMENTATIONS OF THE HIGHER-LEVEL SYSTEM, WHICH MAY BE DEFECTIVE.

8 Disposal and Recycling Information



When this product reaches its end of life, please dispose of it according to your local environmental laws and guidelines.

Dispose of batteries according to your local environmental laws and guidelines.

For information about Kvaser's recycling programs, visit:
https://www.kvaser.com/en/kvaser/recycling-policy.html

9 Legal acknowledgements

9.1 EC Regulatory Compliance

KVASER **EU Declaration of Conformity (DoC)**

We

Company Name:	Kvaser AB	City:	Mölndal
Postal address:	Aminogatan 25	Telephone number:	+46 31 886344
Postcode:	431 53	E-mail address:	sales@kvaser.com

declare that the DoC is issued under our sole responsibility and belongs to the following product:

Product: Kvaser Memorator R SemiPro

Object of the declaration (identification of apparatus allowing traceability):
Product: Kvaser Memorator R SemiPro
Type: 73-30130-00490-0

The object of the declaration described above is in conformity with the relevant Union harmonisation legislation:
COMMISSION DIRECTIVE 2004/104/EC of 14 October 2004 (The Automotive EMC Directive)

DIRECTIVE 2004/108/EC OF THE EUROPEAN PARLIAMENT AND OF THE COUNCIL of 15 December 2004 (EMC-directive)

RoHS recast Directive 2011/65/EU (Art. 4.1)

The following harmonised standards and technical specifications have been applied
(title, date of standard/specification):

EN 50581 (2012)

Signed for and on behalf of:

Mölndal	2019-12-05	
Place of issue	Date of issue	Claes Haglund, Supply Chain and Quality Director

9.2 FCC Regulatory Compliance

KVASER

Federal Communications Commission (FCC) Compliance Information Statement

IDENTIFICATION OBJECT:
Product: Kvaser Memorator R SemiPro
Type: 73-30130-00490-0

APPLICABLE COMPLIANCE STATEMENTS:
CFR Title 47 Part 15 §15.107, §15.109
This device complies with part 15 of the FCC Rules.
Operation is subject to the following two conditions:
(1) This device may not cause harmful interference, and
(2) this device must accept any interference received,
including interference that may cause undesired operation.

RESPONSIBLE PARTY (IN USA) NAME:
Kvaser Inc.
23881 Via Fabricante, Suite 503
Mission Viejo, CA 92691

Internet contact: support@kvaser.com

9.3 Patents, copyrights and trademarks

All trademarks are the property of their respective owner. Windows is a registered trademark of Microsoft Corporation in the United States and other countries.

Adobe, the Adobe logo, and Reader are either registered trademarks or trademarks of Adobe Systems Incorporated in the United States and/or other countries.

MagiSync is a trademark of Kvaser AB.

DeviceNet is a trademark of Open DeviceNet Vendor Association, Inc.

NMEA 2000 is the registered trademark of the National Marine Electronics Association, Inc.

For information about Kvaser related CAN patents, see www.kvaser.com/patent.

The products described in this document are protected by U.S. patent 5,696,911.

10 Document revision history

Version history for document UG_98088_memorator_r_semipro:

Revision	Date	Changes
1.0	2010-11-23	Initial version.
2	2011-01-14	Updated supported OS list.
3	2011-09-01	Updated LED descriptions.
4	2011-09-12	Updated disposal information.
5	2015-01-08	Minor update, layout changes. Hardware installation chapter updated. Updated layout of battery warning box.
5.1	2018-01-29	"Kvaser Device Guide" has replaced "Kvaser Hardware".
5.2	2018-05-07	Minor textual changes.
5.3	2018-08-28	Minor textual changes.
6.0	2019-02-11	Windows Vista or later supported, minor textual changes.
6.1	2019-08-09	Url protocol updated.
6.2	2020-01-27	Added DoC and sdoc.
6.3	2020-08-19	Updated supported OS. Updated content in delivery package.
6.4	2022-04-01	Minor textual changes, added galvanic isolation info to Technical data table.
6.5	2023-02-21	Updated the Technical data table. Added section about intended use. Minor textual changes.
6.6	2024-03-15	Updated Kvaser logo.