Kvaser Memorator Professional User's Guide



Copyright 2011-2025 Kvaser AB, Mölndal, Sweden
https://www.kvaser.com

Printed Monday 17th February, 2025

We believe that the information contained herein was accurate in all respects at the time of printing. Kvaser AB cannot, however, assume any responsibility for errors or omissions in this text. Also note that the information in this document is subject to change without notice and should not be construed as a commitment by Kvaser AB.

(This page is intentionally left blank.)

Contents

1 About this manual **5**

2 Introduction **6**
2.1 Welcome to Kvaser Memorator Professional 6
2.2 Major features of Kvaser Memorator Professional 7
2.3 CAN logger Functions 8
2.4 Real time CAN-USB interface 9
2.5 Kvaser Memorator Tools 9
2.6 Additional software and documentation 9

3 Kvaser Memorator Professional Hardware **10**
3.1 Hardware installation 10
3.2 USB connector 10
3.3 CAN channels 11
3.4 Power supply 12
3.5 Flash disks 13
3.6 External trigger input 17
3.7 External trigger output 18

4 How to use the Kvaser Memorator Professional **20**
4.1 Use as a CAN interface 20
4.2 Configure for logging 20
4.3 Use as a logger 20
4.4 Kvaser Memorator Tools 21
4.5 Disk management 21
4.6 Troubleshooting 22

5 Appendices **23**
5.1 System requirements 23
5.2 Technical data 23
5.3 Performance comparison 24
5.4 Disk capacity 25
5.5 Disk structure 25
5.6 CAN connectors 26
5.7 Updating the firmware 28
5.8 Required driver version 29
5.9 Write protection switch 29
5.10 CAN bus termination 29
5.11 CAN bus overrun 30
5.12 Daisy-chaining several interfaces 30

6 Frequently Asked Questions **31**

7 Safety Instructions **32**
7.1 Intended Use 32
7.2 Usage Warning 32

8 Disposal and Recycling Information **33**

9 Legal acknowledgements **35**
9.1 EC Regulatory Compliance 35
9.2 FCC Regulatory Compliance 37
9.3 Patents, copyrights and trademarks 39

10 Document revision history **40**

1 About this manual

This manual is intended for the Kvaser Memorator Professional users. This manual contains a description of the hardware's properties and general instructions for connecting the device to a computer. The setup software for the Kvaser Memorator Professional is called **Kvaser Memorator Tools** and is described in detail in its online help.

2 Introduction

This section will describe the functions and features of the Kvaser Memorator Professional.

2.1 Welcome to Kvaser Memorator Professional



Figure 1: Kvaser Memorator Professional

Kvaser Memorator Professional is a small, yet advanced portable CAN data logger. The device can be configured in many different ways to achieve the most suitable and effective logging for any occasion. Connecting the logger to a host computer provides direct access for configuring baud rates, trigger conditions and filters using the standalone Kvaser Memorator Tools.

Kvaser Memorator Professional can **also** be used as a powerful two channel real time CAN to USB interface – two products in one!

An additional advantage of the Kvaser Memorator Professional is that it is possible to log traffic on J1587, by connecting the Kvaser Linx J1587 to your Kvaser Memorator Professional you will get an even more powerful and versatile data logger.

Kvaser Memorator Professional can use standard SD or MMC flash disks. These memories are robust, inexpensive and small – about the size of a stamp.

This guide is applicable to the Kvaser Memorator Professional devices listed in Table 1 on Page 7.

Device	Product Number
Kvaser Memorator Professional HS/HS	73-30130-00351-4
Kvaser Memorator Professional HS/LS	73-30130-00417-7

Table 1: The Kvaser Memorator Professional devices and their EAN numbers

2.1.1 Triggers

You can setup the Kvaser Memorator Professional to log continuously, or you can create triggers to control when frames are logged. You can create up to 16 trigger conditions. These conditions can include the reception of a specific message, the value of a specific signal in a message, or an external trigger input's rising or falling edge. You can define a post-trigger time to control the amount of data logged after the trigger expression becomes false, and/or a pre-trigger time to log events leading up to the trigger expression becoming true.

2.1.2 Filters

To enhance logging performance, the Kvaser Memorator Professional can filter out selected messages. The identifiers to be filtered can be picked from a database file or entered manually. Three types of filters are provided: stop filters, pass filters, and counting pass filters. Stop filters prevent messages from being logged. Pass filters ensure a message is logged. Counting pass filters log the specified messages at enumerated occurrences so redundant data is reduced.

2.1.3 Memory cards

Due to the high demands placed on the SD card used by an industrial product such as the Kvaser Memorator Professional, we can only support cards tested and sold by Kvaser, see Section 3.5.1, Supported disk types, on Page 13.

2.2 Major features of Kvaser Memorator Professional

- CAN interface and data logger – two products in one.
- Quick and easy plug-and-play installation.
- Supports both 11-bit (CAN 2.0A) and 29-bit (CAN 2.0B active) identifiers.
- CAN messages are time-stamped with 2 µs resolution.
- Large on-board RAM buffer for CAN messages.
- Supports silent (listen-only) mode for analyzing tools and data logging.
- 100% compatible with applications written with Kvaser CANlib for other Kvaser hardware such as LAPcan, PCIcan, and USBcan.

- Two high-speed CAN channels (compliant with ISO 11898-2), 5 kbit/s up to 1 Mbit/s or one high-speed channel and one low-speed channel (ISO 11898-3), 5 kbit/s to 125 kbit/s.
- Fully compatible with J1939, CANopen, NMEA 2000 and DeviceNet.
- One USB 2.0 HiSpeed connection with data rates up to 480 Mbit/s. The device can also be used in USB 1.1 slots (with up to 12 Mbit/s).
- Power is taken from the CAN bus or from the USB bus. The device automatically switches power supply between the CAN (primary) and the USB (secondary), reducing power drain on a laptop's battery.
- Small, light plastic housing with dimensions (W x L x H) approximately 46 x 115 x 22 mm (1.8 x 4.5 x 0.9 inches) – easy to tuck away (e.g. in a vehicle during a test drive).

2.3 CAN logger Functions

- One flash disk connector that accepts SD and MMC cards, with the size ranging from 32 MB up to 2 GB. SDHC cards are supported with sizes up to 32 GB as of December 2008.
- Built-in real time (calendar) clock with battery backup.
- Easy to use graphic configuration tool.
- Logger status is indicated with five externally visible LEDs.
- Supports silent mode – you can log bus traffic without interfering with it.
- Handles 100% bus load at 1 Mbit/s with two channels (>20000 messages per second).
- Short start up time.
- Upload logged data via USB at 1.2 MB/s when connected via USB 2.0 HiSpeed, or at 14 MB/s when using an external flash disk reader.
- External trigger input (e.g. pushbutton).
- External trigger output (e.g. a LED or buzzer).
- Pretrigger space is limited by available disk space only.
- Select trigger signals from a CAN database, or define them directly in Kvaser Memorator Tools.

2.4 Real time CAN-USB interface

- Uses USB 2.0 HiSpeed, while maintaining compatibility with USB 1.x computers.
- Supports extreme data throughput, quick reaction times and precise time stamping – removing any bottlenecks. Handles up to 40000 messages per second.
- Kvaser MagiSync – automatic time synchronization between all Kvaser products that uses the Kvaser MagiSync feature.
- Supports silent mode for analyzing tools – listen to the bus without interfering with it.
- Supports simultaneous usage of multiple Kvaser interfaces.
- Power supplied through the CAN bus interface or through the USB interface.

2.5 Kvaser Memorator Tools

- Easy to use graphic configuration tool.
- File manager for organizing and converting log files to a variety of formats, including CSV, ASCII, MDF and Matlab formats.
- Configuration of the CAN controller (bit rate and filters).
- Configuration of the trigger conditions.
- Configuration of message filters which controls the messages stored.
- The configuration is downloaded via USB.

2.6 Additional software and documentation

The Kvaser CANlib SDK includes everything you need in order to develop software applications interacting with Kvaser CAN and LIN hardware. The SDK contains full documentation and many sample programs, written in C, C++, C#, Delphi, Python and Visual Basic. Kvaser CAN and LIN hardware is built around the same common software API. Applications developed using one device type will run without modification on other device types.

The latest versions of documentation, software and drivers can be downloaded for free at www.kvaser.com/download.

3 Kvaser Memorator Professional Hardware

In this section you can read more about the CAN channels, power supply, flash disks, LED indicators, and external triggers.

3.1 Hardware installation

For the Kvaser Memorator Professional to communicate with the host computer, a compatible version of the Kvaser driver and firmware must be installed.

After the driver has been installed on the host computer, the firmware may then be downloaded and installed on the Kvaser Memorator Professional.

The latest version of the driver and firmware can be downloaded from www.kvaser.com/download.

The driver is installed by running the file `kvaser_drivers_setup.exe`.

The Kvaser Memorator Professional may be inserted in any free USB socket on the host computer. You do not need to switch the power off before inserting or removing the device.

For information on how to upgrade the firmware, see Section 5.7, Updating the firmware, on Page 28.

The delivery package of Kvaser Memorator Professional contains:

- Kvaser Memorator Professional.
- USB cable.
- SD card.

For driver installation information, see the driver and hardware installation guide which can be found at www.kvaser.com/download.

3.2 USB connector

The Kvaser Memorator Professional has a standard USB type "B" receptacle connector. Connect the device to your computer using any high quality USB 2.0 certified cable. The maximum total USB cable length is 5 m (∼ 16 ft).



As USB cables become longer they are more sensitive to EMI, because they make a longer antenna that can pick up more noise. These issues can be mitigated by using higher quality cables with better shielding. Thicker cables tend to be better than thin ones, and braided shielding tends to be more reliable than only foil. Furthermore, longer cables may introduce signal degradation and timing issues that, if necessary, can be mitigated using shorter cable segments combined with hubs that amplify the signal and handle delays on a per-cable basis.

3.3 CAN channels

The standard Kvaser Memorator Professional has two independent CAN channels that are seen in Figure 2 on Page 11. The first CAN channel is marked on the housing with the symbol "1", where as the second channel (number 2) is not marked. See Figure 3 on Page 12. The CAN connectors are also labeled for easy identification.

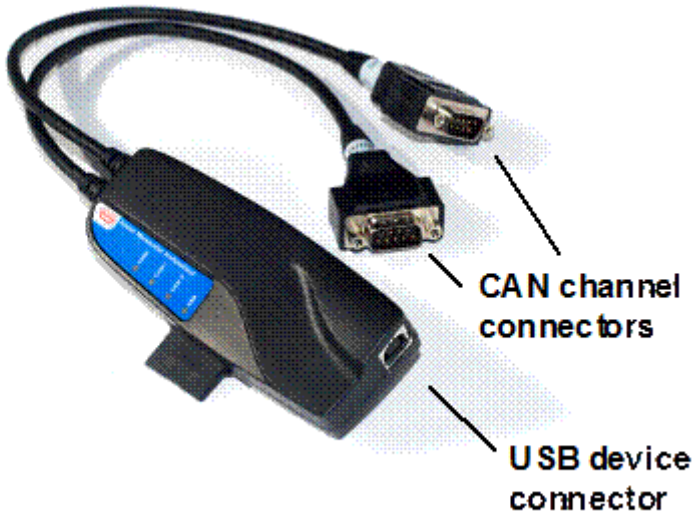

Figure 2: Connections on the Kvaser Memorator Professional.



Figure 3: The CAN channels on Kvaser Memorator Professional.

3.4 Power supply

The Kvaser Memorator Professional can be powered from the CAN side and from the USB side. To operate the Kvaser Memorator Professional in logger mode, you **must** supply power on the CAN side.

When you supply power on the CAN side, provide power on the channel 1 connector. Use pin 9 for V+ and pin 3 for ground. The supply power should be in the range of 6–35 V DC. The power requirement is around 1 W (maximum). In the HS/HS case it is safe, but pointless, to supply power on channel 2. The device will tolerate a higher input voltage, up to 48 V DC.

3.4.1 Kvaser Memorator Professional HS/HS

To use the device as a CAN interface, or to configure the device for logging, it is sufficient to supply power from the USB side.

3.4.2 Kvaser Memorator Professional HS/LS

To use the HS channel as a CAN interface, or to configure the device for logging, it is sufficient to supply power from the USB side. But to use the LS channel (channel 2) as a CAN interface the device needs a reference power, see Section 5.6.1, Pin 9 – Reference Power, on Page 27.

3.5 Flash disks

3.5.1 Supported disk types



IMPORTANT: For Kvaser Memorator Professional, we only support flash disks sold by Kvaser. For more information on available sizes and prices, please contact us.

Due to the high demands placed on the SD card used by an industrial product such as the Kvaser Memorator Professional, we can only support cards tested and sold by Kvaser. Other cards might work; especially industrial graded cards, but we cannot guarantee their functionality.

If you want to use other disk brands, you can use SDHC (Secure Digital High Capacity) disks, SD (Secure Digital), or MMC (MultiMediaCard) disks with your Kvaser Memorator Professional.

The following disk sizes can be used:

MMC	32 MB–1 GB
SD	32 MB–2 GB
SDHC	Up to 32 GB

Table 2: Usable disk sizes

3.5.2 How to handle the disk

Insert the flash disk into the slot of the Kvaser Memorator Professional (see Figure 4 on Page 14) with the disk's golden connector side up. Do not apply excessive force. The disk should slide smoothly into the socket. When fully inserted, the disk should fit well within the slot.

Before removing the disk, we recommend that you either

- Connect the device to a host computer via USB, or
- Remove the power completely (that is, disconnect both CAN 1 and CAN 2.)

3.5.3 LED indicators

The LED indicators (see Figure 5 on Page 15) have somewhat different meaning depending on how your Kvaser Memorator Professional is being used – as a CAN interface or as a CAN logger. The following tables describe how the LEDs behave in these two cases.



Figure 4: How to insert a memory card

Lamp	General meaning
PWR (Green)	Power and general status.
CAN 1 (Yellow)	Status for CAN channel 1.
CAN 2 (Yellow)	Status for CAN channel 2.
ERR (Red and yellow)	Indicates temporary or permanent errors.

Table 3: LED indicators overview

Note that the ERR lamp is bi-colored and can be **both** red and yellow.

PWR (Green)	CAN 1 (Yellow)	CAN 2 (Yellow)	ERR (Red)	Meaning
slow flash				Waiting for USB connection with the host computer.
steady				Power ON (The device is connected to the computer).
	short flash			CAN traffic on channel 1
		short flash		CAN traffic on channel 2
			short flash	Error frame on either channel
			steady	Self-test failed, wrong bit rate, CAN bus transceiver failure.
fast flash				Firmware configuration error (should not normally happen, so please contact the support).

Table 4: LED indicators: detailed meaning



Figure 5: LEDs on the Kvaser Memorator Professional

CAN1/CAN2	ERR	Meaning
short flashes		CAN messages are sent or received
blinking	blinking red	The CAN channel is error passive
blinking slowly	blinking red slowly	The CAN channel is bus off
	short yellow flashes	Error frames are received on CAN1/CAN2

Table 5: LED indicators: CAN status

ERR	Meaning
constant red, one yellow flash	CAN overrun
constant red, two yellow flashes	Disk full
constant red, three yellow flashes	Configuration file missing or corrupt
constant red, four yellow flashes	Disk error
constant red, five yellow flashes	Some other major error; please contact the support

Table 6: LED indicators: Error conditions

PWR	Meaning
90% on and 10% off	Everything OK; logging started without problems. The device is "armed" and waiting for a trigger.
flashing	Everything OK, logging is active and actively logging traffic
blinking slowly 50/50	Logging has stopped due to a trigger condition and Kvaser Memorator Professional is off bus.

Table 7: LED indicators: Logging status

PWR	CAN1/CAN2	ERR	Meaning
"Running lights" on all lamps			The device is communicating with the tool
		blinking red	Disk activity such as formatting

Table 8: LED indicators: When connected to Kvaser Memorator Tools

PWR	CAN1/CAN2	ERR	Meaning
All lamps blinking slowly			Disk is missing or improperly inserted, and no USB communication is detected. Check the disk or the USB connection.
flash every few seconds			No USB communication. Check USB cables and communication. Unplug the device and reconnect it after a few seconds. Check that the device driver is installed correctly.
flashing		constant red	Firmware configuration error. This should not normally happen. Please contact the support.

Table 9: LED indicators: Other blink patterns

3.6 External trigger input

The Kvaser Memorator Professional can be set up to trigger on an external signal. There are two ways to create this signal:

- Connect a switch from pin 4 on CAN channel 1 to ground, which can be found on pin 3 on the same connector. See Figure 6.
- Connect a signal between 0 and 5 V to pin 4 on CAN channel 1.

Internally, pin 4 on CAN channel 1 has a pull-up to +5 V. See Figure 7 on Page 18.

The trigger can be configured to react on both falling and rising edges.

- If it is set to trigger on a falling edge, the trigger is activated when pin 4 is connected to ground.
- If it is set to trigger on a rising edge, the trigger is activated when pin 4 is disconnected from ground.

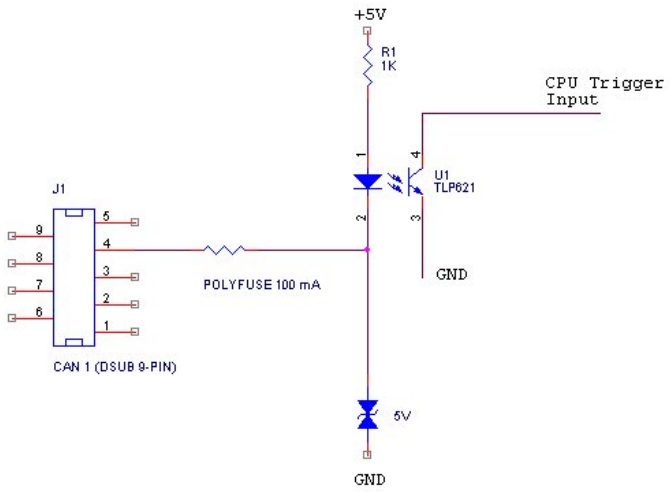

Figure 6: The trigger input inside the Kvaser Memorator Professional.



Note: the trigger input is debounced by the firmware. A pulse of shorter length than approximately 30 ms will not be detected.

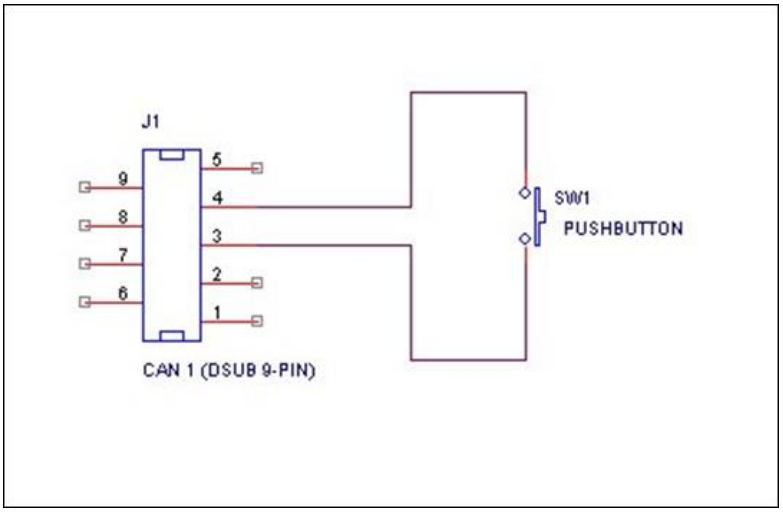

Figure 7: How to connect an external trigger switch.

3.7 External trigger output

It is also possible to send an external pulse through channel two's CAN connector pin 4 on the Kvaser Memorator Professional. For further information on how to configure the Kvaser Memorator Professional to send an external pulse, please refer to the Kvaser Memorator tools online help.

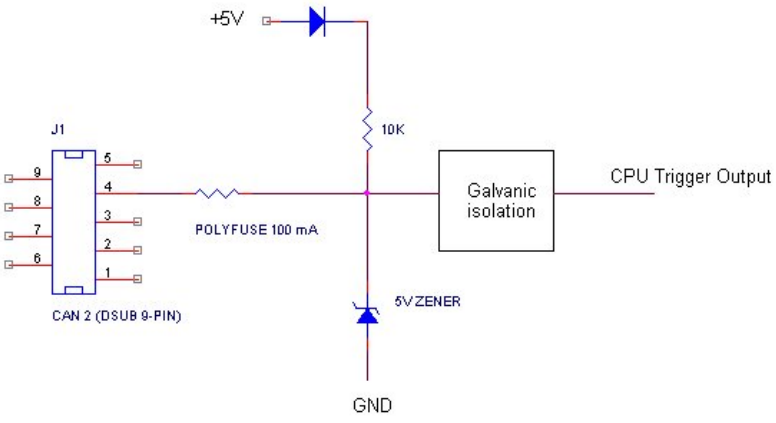

Figure 8: The trigger output inside the Kvaser Memorator Professional.

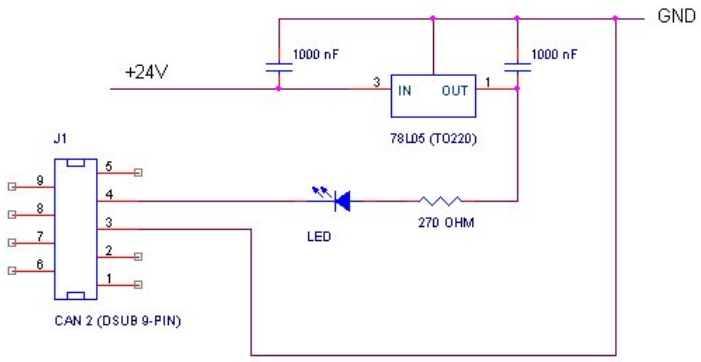

Figure 9: Sample circuit for connecting a LED to the trigger output.

4 How to use the Kvaser Memorator Professional

The Kvaser Memorator Professional can operate both as a high performance real time USB interface (USB-CAN mode) and as a data logger (logger mode). This section will describe how to use the different modes.

4.1 Use as a CAN interface

To use the Kvaser Memorator Professional as a CAN interface; connect the unit to a free USB socket on your host computer or USB hub. You do not need to insert a flash disk. If a flash disk is inserted, you do not need to remove it.



When used as a CAN interface, the green LED will be illuminated and the yellow LEDs will emit short flashes when CAN messages are transmitted and received.

4.2 Configure for logging

To prepare your Kvaser Memorator Professional for logging:

1. Connect the unit to a free USB socket on your host computer or USB hub.
2. Insert a flash disk (see Figure 4 on Page 14)
3. Start the Kvaser Memorator Tools program and press the Connect button.

The device should immediately show a running light pattern on the LEDs.

4.3 Use as a logger

To use your Kvaser Memorator Professional as a logger:

1. Insert a formatted flash disk that contains a valid configuration
2. Optionally, connect an external trigger switch to the CAN1 connector
3. Optionally, connect the digital output pin on the CAN2 connector to your equipment
4. Supply power on the CAN1 connector

Logging should start immediately.



If everything is OK, the green PWR lamp should either blink quickly, or be illuminated 90% and dark 10% of the time. If CAN traffic is detected, the CAN1 and CAN2 lamps should be illuminated.

4.4 Kvaser Memorator Tools

To log CAN traffic with the Kvaser Memorator Professional, you need to create and download a configuration to the device. The Kvaser Memorator Professional needs to be connected by USB and have a disk inserted to be configured. Start the host computer application Kvaser Memorator Tools and press the *Connect* button in the toolbar. If the LEDs on Kvaser Memorator Professional are flashing in a "running light" pattern, the device is ready to communicate with Kvaser Memorator Tools.

For further information about Kvaser Memorator Tools please refer to its online help.

4.5 Disk management

- Handle the disks with care. They are robust, but better safe than sorry.
- Avoid removing the disk when the device is powered up from an external power source. You should first remove the external power and then remove the disk. If the device is connected via USB, you should make sure the Kvaser Memorator Tools isn't writing to the disk before you remove it.
- You **may** remove and reconnect the disk, the external power and the USB in any order you like without damaging the **hardware**. But if you follow the advice above, you will not damage **your logged data**.
- If you need to remove the disk when the device is being used as a logger and you can't disconnect the external power, try to connect the USB cable to a running host computer first. When the Kvaser Memorator Professional discovers the active USB connection, the device will stop logging and close the log file in an orderly fashion.

4.6 Troubleshooting



- Use "Kvaser Device Guide" in the Control Panel to verify that the computer really can talk to the Kvaser Memorator Professional. Read out the firmware version. If it's all zeros, there are communication problems.
- Verify that the disk is formatted. If in doubt, reformat it using the Kvaser Memorator Tools.
- If configuration fails, verify that the Kvaser Memorator Professional is in configuration mode when you are using the Kvaser Memorator Tools. You can see this by looking at the LEDs – they should flash in "running light" fashion.
- Examine the pattern of flashing/illuminated LEDs on the unit. Compare the observed pattern against those described in Section 3.5.3, LED indicators, on Page 13.
- If the LEDs are not flashing or illuminated at all, check the power supply.

5 Appendices

In this section you will find technical information about Kvaser Memorator Professional and its connectors.

5.1 System requirements

A USB interface. Use USB 2.0 HiSpeed for optimum results, although the device will work with a USB 1.1 interface too.

5.2 Technical data

In Table 10 on Page 24 you will find the Kvaser Memorator Professional's technical specifications.

CAN Channels	2 (CAN 2.0A and 2.0B active).
CAN Transceivers (HS)	SN 65251 (Compliant with ISO 11898-2)
CAN Transceivers (HS)	TJA1054 (Compliant with ISO 11898-3)
Microcontroller	Renesas M32C
Galvanic isolation	Yes
CAN Bit Rate	5 kbit/s to 1 Mbit/s
Timestamp resolution	2 μs
Error Frame Detection	Yes, both channels.
Error Frame Generation	Yes, when used as a USB-CAN interface.
Kvaser t programming	No
Kvaser CANtegrity	No
Host interface	USB 2.0. Supports HiSpeed (HS) at 480 Mbit/s. Compatible with USB 1.1 at 12 Mbit/s.
Host OS	Windows (7 or later), Linux, Android.
Power consumption	~5 V and 130 mA if powered from the USB and ~850 mW if powered from the CAN bus.
External power	Pin 9 (V+) and pin 3 (GND) on CAN channel 1.
Minimum operating voltage	6.2 V DC (cold start) and 5.6 V DC (during operation).
Maximum operating voltage	35 V DC.
Absolute maximum input voltage	48 V DC.
Hardware configuration	Done by software (Plug & Play).
Dimensions (W x L x H)	46 x 115 x 22 mm (1.8 x 4.5 x 0.9 inch)
Operating temperature	–40 °C to +85 °C
Weight	142 g including cables and connectors.
Storage temperature	–40 °C to +85 °C
Relative Humidity	0% to 85% (non-condensing.)
External trigger	Available on CAN connector 1 pin 4. The input is protected by a self-healing fuse and has a 1 kΩ pull-up to +5 V. The firmware can detect both rising and falling edges. The allowed voltage is 0–5 V DC.
External output	Available on CAN connector 2 pin 4. The output is a pull-down to ground and is protected by a self-healing fuse. The allowed voltage is 0–5 V DC.

Table 10: Kvaser Memorator Professional Technical specifications

5.3 Performance comparison

In Table 11 on Page 25 the performance of the Kvaser Memorator Professional is compared with its older sibling, the Kvaser Memorator.

	Kvaser Memorator Professional	Kvaser Memorator
RX performance per channel (when used as a CAN interface)	20 000 messages/s	12 000 messages/s
TX performance per channel (when used as a CAN interface)	20 000 messages/s	6000 messages/s
Logging performance	20 000 messages/s	5000 messages/s
Time stamp accuracy	2 μs	100 μs
Message filter support	Stop, pass, counting	Pass
SD memory size support	2 GB	1 GB
SDHC memory support	32 GB	No
Galvanic isolation	Yes	No
Number of triggers	16	8
Startup time when used as a logger	< 0.25 s	2.5 s
Upload of logged data	1.4 MB/s (when connected via USB 2.0 HiSpeed), 14 MB/s (when using an external disk reader)	

Table 11: Performance comparison

5.4 Disk capacity

Each CAN message occupies 24 bytes in the log file. The following table gives some **approximate** values of the capacity for various disk sizes.

Disk size	Approximate capacity	Approximate time to fill the disk (at 500 messages per second)
64 MB	2,700,000 messages	1h 30min
256 MB	10,700,000 messages	6h
512 MB	21,300,000 messages	12h
1 GB	41,700,000 messages	23h
2 GB	83,300,000 messages	46h 30min

Table 12: Disk capacity

5.5 Disk structure

You can use an external card reader to read the files on the flash disk. The Kvaser Memorator Tools can read the log data directly via the external card reader, so you don't need to copy the files to your hard disk.



Make sure that the version of Kvaser Memorator Tools is suitable for the firmware version on the Kvaser Memorator Professional

1. Place the card in the card reader
2. Run the Memorator Professional Tool
3. Press the *Connect* button
4. In the *Connect Dialog* check the *"Use a device other than a Kvaser Memorator Professional"* checkbox and press *Next*
5. Select the radio button titled *"External SD/MMC card reader"* and press *Next*
6. Browse for the card reader drive location and press *Next*
7. Select a format version and press *Next*
8. Press *Finish* and the card will be connected to the Kvaser Memorator Tools
9. Now it is possible to work with the card in the same way as if it is connected to a Kvaser Memorator Professional



Note: It is essential that the flash disks be formatted using the Kvaser Memorator Tools. You should not copy any files to the disk using an ordinary flash disk writer. Kvaser Memorator Tools will create several special files on the disk. These files must be contiguous and the structure and position of these files must be determined by the firmware, or the data logging will fail.

The Kvaser Memorator Tools will create the following files on the flash disk when formatting it.

- `LOGDATA.KMF`
- `LOGDAT<nn>.KMF`
- `PARAM.LIF`
- `DATABASE.BIN`

The `LOGDATA.KMF` and/or `LOGDAT<nn>.KMF` will by default occupy nearly the whole disk regardless of whether the file contains any logging data or not. `PARAM.LIF` and `DATABASE.BIN` will occupy the rest of the disk.

5.6 CAN connectors

The Kvaser Memorator Professional has two CAN channels. Both CAN channels have 9-pin D-SUB connectors (see Figure 10 on Page 27) with the pinning described in Table 13 on Page 27 and Table 14 on Page 27.

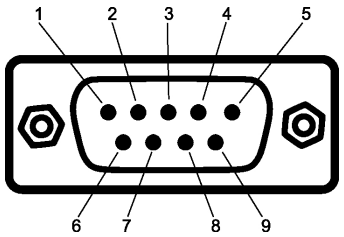

Figure 10: The D-SUB connector pin numbers on a CAN channel.

D-SUB pin number	Function HS
1	Not connected
2	CAN_L
3	GND
4	External trigger input
5	Shield
6	Not connected
7	CAN_H
8	Not connected
9	Power supply to the device
Auto-reset fuses protect Pins 2, 3, 4, 7 and 9.	

Table 13: D-SUB pin configuration of the CAN channel 1

D-SUB pin number	Function HS	Function LS
1	Not connected	Not connected
2	CAN_L	CAN_L
3	GND	GND
4	External trigger output	External trigger output
5	Shield	Shield
6	Not connected	Not connected
7	CAN_H	CAN_H
8	Not connected	Not connected
9	Not connected	Reference Power
Auto-reset fuses protect Pins 2, 3, 4, 7 and 9.		

Table 14: D-SUB pin configuration of the CAN channel 2



Note: Always connect the ground pin on the D-SUB to the ground of your CAN bus.

5.6.1 Pin 9 – Reference Power

Kvaser Memorator Professional HS/LS only.

Connect the battery voltage to this pin. It is used by the transceiver to detect whether CAN_H and/or CAN_L are shorted to the system voltage. It may be omitted but the transceiver will then not detect a short circuit properly. The operating input voltage range is 6–27 V (absolute maximum rating is 40 V). The input is protected from load dumps.

5.7 Updating the firmware

Connect the Kvaser Memorator Professional to your host computer with the USB cable. A flash disk may be present but not necessary. Double-click on the file "update.exe". The Kvaser Memorator Tools also can update the Kvaser Memorator Professional firmware directly (see the online help if you want to learn more). A small application opens where you should see the device listed if correctly connected to your host computer (see Figure 11). Select the device to program and click the *Next* button

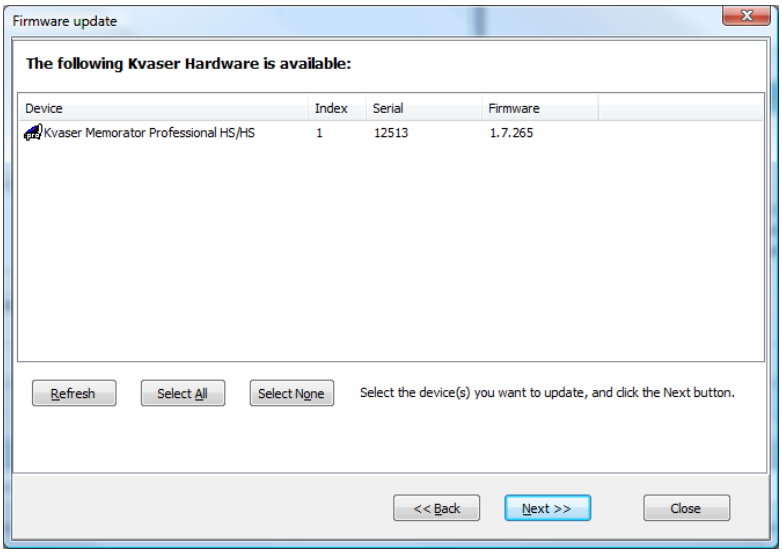

Figure 11: Firmware update, select device.

Click on the *Start Upgrade* button to start programming (see Figure 12 on Page 29). The programming takes approximately 20 seconds. The progress is printed on the screen, and typically looks like this:



No error messages should appear. If you see error messages, try to disconnect and reconnect the device, and then perform the operation again.

To verify that the firmware is updated,

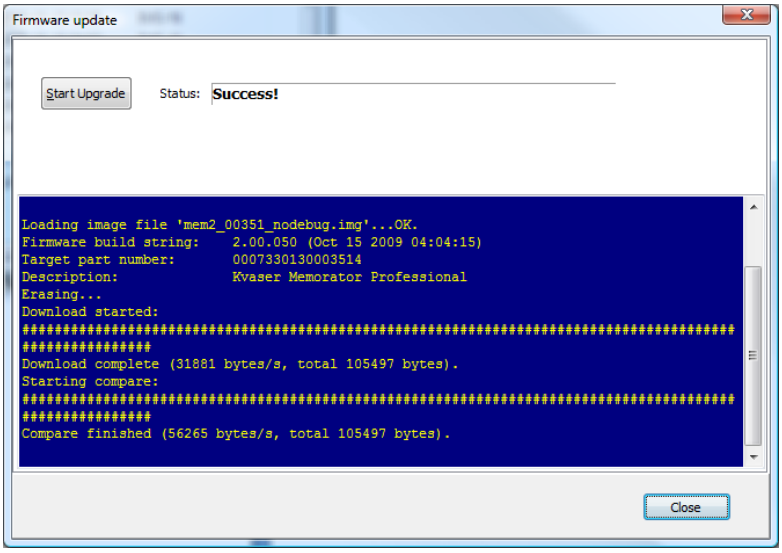

Figure 12: Firmware update, start upgrade.

- Double-click on "Kvaser Device Guide" in the Control Panel. Select "Kvaser Memorator Professional" in the tree view to the left, and click on either channel. The firmware revision information appears in the right half of the window.

5.8 Required driver version

You need at least driver (CANlib) version 3.9 to use your Kvaser Memorator Professional.

5.9 Write protection switch

Kvaser Memorator Professional will **disregard** the setting of the write protection switch on SD and SDHC memories. This is by design. The intention is to minimize the risk of a logging failure when the write protection switch is set by accident.



The setting of the write protection switch on SD and SDHC memories is disregarded. The Kvaser Memorator Professional will write to the disk even if the write protection switch is set.

5.10 CAN bus termination

Every CAN bus must be terminated with a 120 Ω resistor at each end of the bus. The Kvaser Memorator Professional does not contain any CAN bus terminators, because their inclusion could cause severe disturbance in a system which is already correctly terminated.

For laboratory or testing use, the exact value of the termination resistors is not always critical. Sometimes a single terminator is sufficient. For production, proper termination is essential. If you see error frames on the bus, you should check the termination.



To save yourself a lot of trouble, always terminate the CAN bus properly

5.11 CAN bus overrun

Under extremely heavy load, high bit rates and long bursts of messages, the Kvaser Memorator Professional can lose messages. This loss should be a rare occasion. If such a loss occurs, the Kvaser Memorator Tools will display a notification message when the file is extracted. Some of the file formats, that support such a feature, will also indicate when the overrun occurred. (See help section in Kvaser Memorator Tools for details about file formats.)



To avoid losing important messages during logging, filters can be used. This will decrease the load on the Kvaser Memorator Professional and ensure that important information is not lost.

5.12 Daisy-chaining several interfaces

You can daisy chain several Kvaser Memorator Professional units to gain additional logging capacity. To do this,

- Connect the trigger output of one device to the trigger input of the next device.
- Using the Kvaser Memorator Tools, configure the trigger output of the first device to emit a pulse when the disk becomes full.
- Configure the trigger input of the second device to start logging when a falling edge is detected. Set the post-trigger time to 0 (infinite) and the pre-trigger time to 1 second.

You now have a setup where the second unit starts logging when the first one becomes full.

6 Frequently Asked Questions

Q: How many messages per second can Kvaser Memorator Professional store on the disk?

A: It depends on the flash disk type. Fast disks can typically accommodate 20000 messages per second. For all practical purposes, this means full busload even at 1 Mbit/s.

Q: What disk brands are the fastest?

A: New models are introduced all the time, but during testing we have had consistent good results from ATP (https://www.atpinc.com) and TwinMOS Ultra-X 150x (https://www.twinmos.com). Your mileage may vary, of course.

Q: I have a very busy J1939 network. Will the Kvaser Memorator Professional be able to handle that?

A: Most likely. J1939 operates at 250 kbit/s, which means up to 2000 8-byte messages per second. As a contrast, the measured logging capacity of the Kvaser Memorator Professional is 20000 messages per second, which is around 10 times higher.

Q: How many hours will a 256 MB disk last?

A: It depends on the CAN bus load. To get a feeling for the numbers involved, see section Disk capacity on page 25.

Q: Can I use 2 (4, 8, 16, . . .) GB disks?

A: Yes. As of December 2008, the largest supported disk size is 32 GB. Be sure to use the latest firmware.

Q: Can I use SDHC disks?

A: Yes.

Q: Can I use any SD/MMC disk?

A: Yes, in principal, but due to the high demands placed on the SD card used by an industrial product such as the Kvaser Memorator Professional, we can only support cards tested and sold by Kvaser, see Section 3.5.1, Supported disk types, on Page 13.

Q: Can I use an external SD/MMC card reader to read the logged data?

A: Yes, the Kvaser Memorator Tools can read data from external disk readers, as well as directly from a connected Kvaser Memorator Professional.

Q: I have logged a lot of data on my Kvaser Memorator Professional and now I'm trying to open the list of files inside the Kvaser Memorator Tools, but it seems to hang. What's up?

A: If the logger was interrupted while writing to the disk, the device might, on certain rare occasions, need a long time to extract the list of files. This is because the software needs to rebuild certain internal data structures first. Please be patient – eventually the list of files will appear. Read Section 4.5, Disk management, on Page 21 for advice on how to avoid this situation.

7 Safety Instructions

7.1 Intended Use

Kvaser interfaces are used to connect computer systems to CAN buses. The Kvaser Memorator Professional is intended for connection to a computer via the USB port.

7.2 Usage Warning



WARNING FOR ALL USERS

WARNING! - YOUR USE OF THIS DEVICE MUST BE DONE WITH CAUTION AND A FULL UNDERSTANDING OF THE RISKS!
THIS WARNING IS PRESENTED TO INFORM YOU THAT THE OPERATION OF THIS DEVICE MAY BE DANGEROUS. YOUR ACTIONS CAN INFLUENCE THE BEHAVIOR OF A CAN-BASED DISTRIBUTED EMBEDDED SYSTEM, AND DEPENDING ON THE APPLICATION, THE CONSEQUENCES OF YOUR IMPROPER ACTIONS COULD CAUSE SERIOUS OPERATIONAL MALFUNCTION, LOSS OF INFORMATION, DAMAGE TO EQUIPMENT, AND PHYSICAL INJURY TO YOURSELF AND OTHERS. A POTENTIALLY HAZARDOUS OPERATING CONDITION IS PRESENT WHEN THE FOLLOWING TWO CONDITIONS ARE CONCURRENTLY TRUE: THE PRODUCT IS PHYSICALLY INTERCONNECTED TO A REAL DISTRIBUTED EMBEDDED SYSTEM; AND THE FUNCTIONS AND OPERATIONS OF THE REAL DISTRIBUTED EMBEDDED SYSTEM ARE CONTROLLABLE OR INFLUENCED BY THE USE OF THE CAN NETWORK. A POTENTIALLY HAZARDOUS OPERATING CONDITION MAY RESULT FROM THE ACTIVITY OR NON-ACTIVITY OF SOME DISTRIBUTED EMBEDDED SYSTEM FUNCTIONS AND OPERATIONS, WHICH MAY RESULT IN SERIOUS PHYSICAL HARM OR DEATH OR CAUSE DAMAGE TO EQUIPMENT, DEVICES, OR THE SURROUNDING ENVIRONMENT.
WITH THIS DEVICE, YOU MAY POTENTIALLY:

- CAUSE A CHANGE IN THE OPERATION OF THE SYSTEM, MODULE, DEVICE, CIRCUIT, OR OUTPUT.
- TURN ON OR ACTIVATE A MODULE, DEVICE, CIRCUIT, OUTPUT, OR FUNCTION.
- TURN OFF OR DEACTIVATE A MODULE, DEVICE, CIRCUIT, OUTPUT, OR FUNCTION.
- INHIBIT, TURN OFF, OR DEACTIVATE NORMAL OPERATION.
- MODIFY THE BEHAVIOR OF A DISTRIBUTED PRODUCT.
- ACTIVATE AN UNINTENDED OPERATION.
- PLACE THE SYSTEM, MODULE, DEVICE, CIRCUIT, OR OUTPUT INTO AN UNINTENDED MODE.

ONLY THOSE PERSONS WHO:
(A) ARE PROPERLY TRAINED AND QUALIFIED WITH RESPECT TO THE USE OF THE DEVICE,
(B) UNDERSTAND THE WARNINGS ABOVE, AND
(C) UNDERSTAND HOW THIS DEVICE INTERACTS WITH AND IMPACTS THE FUNCTION AND SAFETY OF OTHER PRODUCTS IN A DISTRIBUTED SYSTEM AND THE APPLICATION FOR WHICH THIS DEVICE WILL BE APPLIED, MAY USE THE DEVICE.
PLEASE NOTE THAT YOU CAN INTEGRATE THIS PRODUCT AS A SUBSYSTEM INTO HIGHER-LEVEL SYSTEMS. IN CASE YOU DO SO, KVASER AB HEREBY DECLARES THAT KVASER AB'S WARRANTY SHALL BE LIMITED TO THE CORRECTION OF DEFECTS, AND KVASER AB HEREBY EXPRESSLY DISCLAIMS ANY LIABILITY OVER AND ABOVE THE REFUNDING OF THE PRICE PAID FOR THIS DEVICE, SINCE KVASER AB DOES NOT HAVE ANY INFLUENCE ON THE IMPLEMENTATIONS OF THE HIGHER-LEVEL SYSTEM, WHICH MAY BE DEFECTIVE.

8 Disposal and Recycling Information



When this product reaches its end of life, please dispose of it according to your local environmental laws and guidelines.

Dispose of batteries according to your local environmental laws and guidelines.

For information about Kvaser's recycling programs, visit:
https://www.kvaser.com/en/kvaser/recycling-policy.html

9 Legal acknowledgements

9.1 EC Regulatory Compliance

KVASER **EU Declaration of Conformity (DoC)**

We

Company Name:	Kvaser AB	City:	Mölndal
Postal address:	Aminogatan 25	Telephone number:	+46 31 886344
Postcode:	431 53	E-mail address:	sales@kvaser.com

declare that the DoC is issued under our sole responsibility and belongs to the following product:

Product:	Kvaser Memorator Professional HS/HS

Object of the declaration (identification of apparatus allowing traceability):
Product: Kvaser Memorator Professional HS/HS
Type: 73-30130-00351-4

The object of the declaration described above is in conformity with the relevant Union harmonisation legislation:
COMMISSION DIRECTIVE 2004/104/EC of 14 October 2004 (The Automotive EMC Directive)

DIRECTIVE 2004/108/EC OF THE EUROPEAN PARLIAMENT AND OF THE COUNCIL of 15 December 2004 (EMC-directive)

RoHS recast Directive 2011/65/EU (Art. 4.1)

The following harmonised standards and technical specifications have been applied
(title, date of standard/specification):

EN 50581 (2012)

Signed for and on behalf of:

Mölndal	2019-12-05	
Place of issue	Date of issue	Claes Haglund, Supply Chain and Quality Director

KVASER **EU Declaration of Conformity (DoC)**

We

Company Name:	Kvaser AB	City:	Mölndal
Postal address:	Aminogatan 25	Telephone number:	+46 31 886344
Postcode:	431 53	E-mail address:	sales@kvaser.com

declare that the DoC is issued under our sole responsibility and belongs to the following product:

Product: Kvaser Memorator Professional HS/LS

Object of the declaration (identification of apparatus allowing traceability):
Product: Kvaser Memorator Professional HS/LS
Type: 73-30130-00417-7

The object of the declaration described above is in conformity with the relevant Union harmonisation legislation:
COMMISSION DIRECTIVE 2004/104/EC of 14 October 2004 (The Automotive EMC Directive)

DIRECTIVE 2004/108/EC OF THE EUROPEAN PARLIAMENT AND OF THE COUNCIL of 15 December 2004 (EMC-directive)

RoHS recast Directive 2011/65/EU (Art. 4.1)

The following harmonised standards and technical specifications have been applied
(title, date of standard/specification):

EN 50581 (2012)

Signed for and on behalf of:

Mölndal	2019-12-05	
Place of issue	Date of issue	Claes Haglund, Supply Chain and Quality Director

9.2 FCC Regulatory Compliance

KVASER

Federal Communications Commission (FCC) Compliance Information Statement

IDENTIFICATION OBJECT:
Product: Kvaser Memorator Professional HS/HS
Type: 73-30130-00351-4

APPLICABLE COMPLIANCE STATEMENTS:
CFR Title 47 Part 15 §15.107, §15.109
This device complies with part 15 of the FCC Rules.
Operation is subject to the following two conditions:
(1) This device may not cause harmful interference, and
(2) this device must accept any interference received,
including interference that may cause undesired operation.

RESPONSIBLE PARTY (IN USA) NAME:
Kvaser Inc.
23881 Via Fabricante, Suite 503
Mission Viejo, CA 92691

Internet contact: support@kvaser.com

KVASER

Federal Communications Commission (FCC) Compliance Information Statement

IDENTIFICATION OBJECT:

Product: Kvaser Memorator Professional HS/LS
Type: 73-30130-00417-7

APPLICABLE COMPLIANCE STATEMENTS:

CFR Title 47 Part 15 §15.107, §15.109
This device complies with part 15 of the FCC Rules.
Operation is subject to the following two conditions:
(1) This device may not cause harmful interference, and
(2) this device must accept any interference received,
including interference that may cause undesired operation.

RESPONSIBLE PARTY (IN USA) NAME:

Kvaser Inc.
23881 Via Fabricante, Suite 503
Mission Viejo, CA 92691

Internet contact: support@kvaser.com

9.3 Patents, copyrights and trademarks

All trademarks are the property of their respective owner. Windows is a registered trademark of Microsoft Corporation in the United States and other countries.

Adobe, the Adobe logo, and Reader are either registered trademarks or trademarks of Adobe Systems Incorporated in the United States and/or other countries.

MagiSync is a trademark of Kvaser AB.

DeviceNet is a trademark of Open DeviceNet Vendor Association, Inc.

NMEA 2000 is the registered trademark of the National Marine Electronics Association, Inc.

For information about Kvaser related CAN patents, see www.kvaser.com/patent.

The products described in this document are protected by U.S. patent 5,696,911.

10 Document revision history

Version history for document UG_98038_memorator_pro:

Revision	Date	Changes
1	2006-02	Initial version.
12	2015-01-08	Minor update.
13	2015-03-30	Updated layout.
14	2015-08-11	Minor textual changes.
15	2016-05-10	Removed color coding of CAN connector.
16	2017-01-09	Updated compliance text, added link to patents.
16.1	2018-05-07	Minor textual changes.
16.2	2018-08-28	Minor textual changes.
17.0	2019-02-11	Windows Vista or later supported, minor textual changes.
18	2019-06-17	"Kvaser Device Guide" has replaced "Kvaser Hardware".
18.1	2019-08-01	Url:s updated.
18.2	2020-01-27	Added DoC:s and sdoc:s.
18.3	2020-08-19	Updated supported OS. Updated content in delivery package.
18.4	2022-04-01	Added galvanic isolation info, Android, to Technical data table. Minor textual changes.
18.5	2023-02-13	Updated the Technical data table. Added section about intended use. Minor textual changes.
18.6	2024-03-15	Updated Kvaser logo.